The FERGUSON SYSTEM

PARTS BOOK

FOR F-EO-20 AND 30 AGRICULTURE MOWER

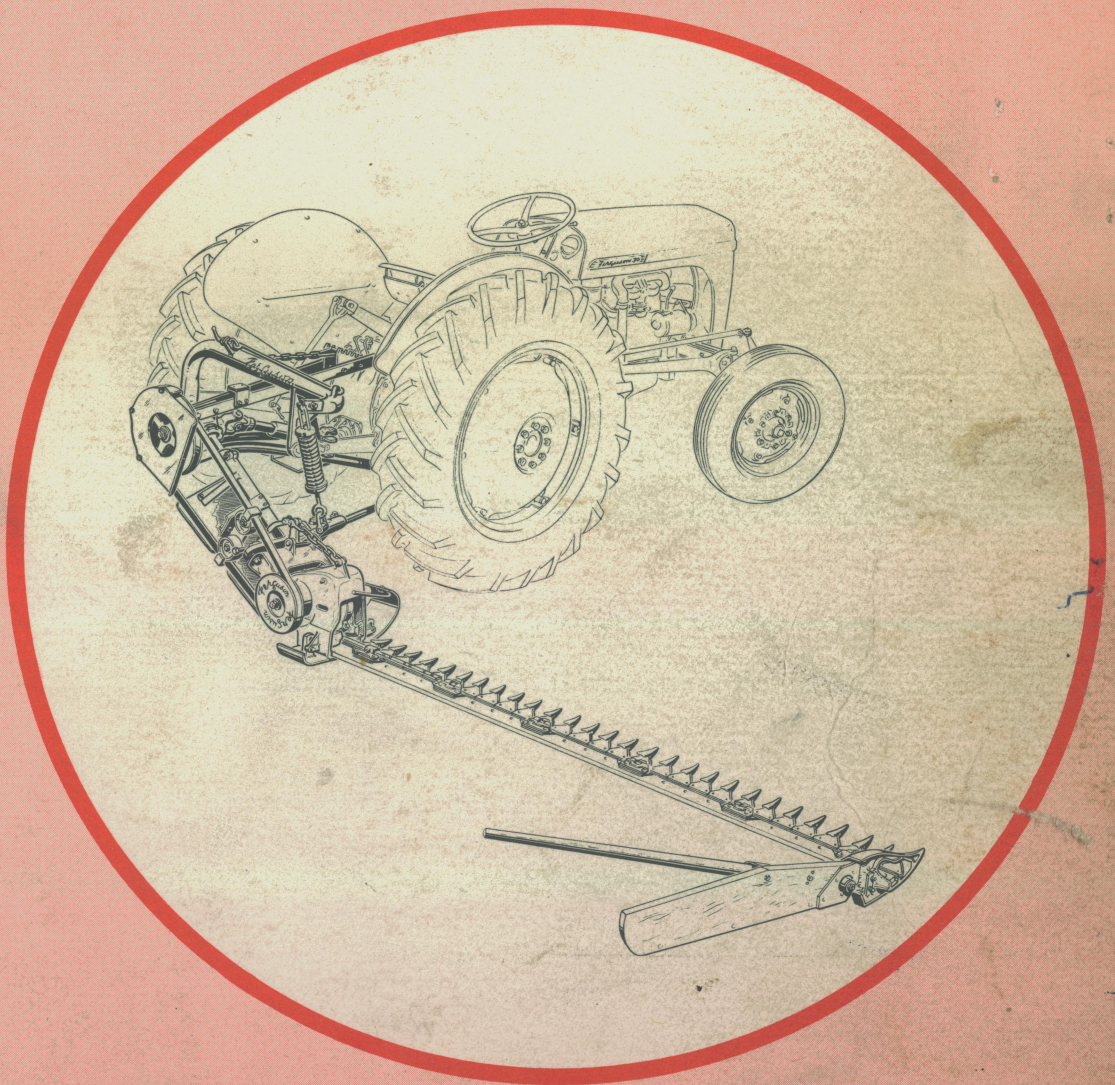

MARCH 1953

Harry Ferguson, Inc.

DETROIT MICHIGAN

COPYRIGHT 1953 HARRY FERGUSON, INC.

FOREWORD

This parts book for the F-EO-20 - narrow tread, and 30 - wide tread, Agricultural Mowers has been arranged for your easy reference in ordering and identifying current model service parts.

The arrangement of this parts book follows the same pattern we have established in previous books. Text appears with or on the accompanying page of the illustration.

★ ★ ★

INSTRUCTIONS

This parts book illustrates the F-EO-20 - narrow tread - Agricultural Mower only. Throughout the text appear those parts either required, or to be deleted, which constitute the difference between an F-EO-20 and F-EO-30.

As in all other parts books, all part numbers that appear in this book are serviceable parts, unless designated by the letters N. S. or the words Not Serviced.

Cutter bars are available in both 6 foot and 7 foot lengths, for use on either the F-EO-20 or 30. For this reason, the quantity required column for Cutter Bars has been divided into only two columns, headed 6 and 7 foot.

A SYMBOL OF QUALITY

USE ONLY GENUINE The FERGUSON SYSTEM ***FERGUSON SERVICE PARTS***

MADE IN U.S.A.

TABLE OF CONTENTS

GROUP	DESCRIPTION	PAGE
3	BALANCE SPRING	10
7	CUTTER BAR AND KNIFE ASSEMBLIES	21
4	DETENT AND PULL BAR ASSEMBLY	11
5	DRAG BAR AND RELATED PARTS	13, 15
6	DRIVE UNIT ASSEMBLY	17, 19
2	FRAME ASSEMBLY AND RELATED PARTS	9
	NUMERICAL INDEX	3, 4
8	OUTER SHOE AND SWATHBOARD	22
1	PULLEY, GUARD, DRIVE SHAFT AND RELATED PARTS	7
	STANDARD PARTS INDEX	5

NUMERICAL INDEX

PART NO.	DESCRIPTION	REF.	PAGE
6F-EO-1205	BAR ASSY. - Cutter - 6 Ft.		21
7F-EO-1205	BAR ASSY. - Cutter - 7 Ft.		21
F-EO-1224	SECTION - Knife	15	21
F-EO-1225	SECTION - Knife	15	21
F-EO-1227	BOLT - Bar to Shoe	58, 28	19, 21
F-EO-1230	SECTION - Knife	16	21
F-EO-1231	CLIP - Knife	23	21
F-EO-1232	CLIP - Knife	20	21
6F-EO-1233	BACK - Knife	17	21
7F-EO-1233	BACK - Knife	17	21
P-EO-1234	SECTION - Knife	14	21
P-EO-1235	SECTION - Knife	14	21
P-EO-1236	PLATE - Ledger		21
F-EO-1245	GUARD ASSY. - Cutter Bar	27	21
6F-EO-1250	KNIFE ASSY.		21
7F-EO-1250	KNIFE ASSY.		21
6F-EO-1251	KNIFE ASSY.		21
7F-EO-1251	KNIFE ASSY.		21
F-EO-1252	GUARD ASSY. - Cutter Bar	27	21
F-EO-1278	BAR ASSY. - Drag	3	13
F-EO-1279	BAR ASSY. - Drag	3	13
F-EO-1400	DRIVE UNIT ASSY.		17
F-EO-1401	HOUSING ASSY.	27	17
F-EO-1403	ROD & CAP ASSY. - Conn.	37	19
F-EO-1404	ROD & CAP ASSY. - Conn.	45	19
F-EO-1405	HOUSING - Bearing	4	17
F-EO-1406	CRANKSHAFT	13	17
F-EO-1408	PLATE - Cover	24	17
N.S.F-EO-1409	CAP - Rod	17	17
F-EO-1410	HUB - Front	31	17
N.S.F-EO-1411	CAP— Rod	22	17
F-EO-1413	SCREW - Cap to Rod	18, 20	17, 17
F-EO-1414	SHIELD - Rod Bearing	44, 48	19, 19
N.S.F-EO-1416	ROD - Conn. R. H.	46	19
N.S.F-EO-1417	ROD - Conn. L. H.	38	19
F-EO-1418	LEVER ASSY. - Knife	40	19
F-EO-1424	COUNTERWEIGHT ASSY.	43	19
F-EO-1431	BOLT - Rod Bearing	39	19
F-EO-1432	BOLT - Rod Bearing	42	19
F-EO-1434	NUT - Bearing Bolt	49	19
F-EO-1435	PIN - Lever Pivot	30	17
F-EO-1436	SCREW - Set	26	17
F-EO-1439	PULLEY - Driven	3	17
F-EO-1453	SHIELD - Bearing	16	7
F-EO-1454	DRIVESHAFT	12	7
F-EO-1455	PULLEY - Drive	5	7
F-EO-1459	RETAINER - Spring	8	7
F-EO-1460	CONNECTOR & KNIFE HEAD		21
F-EO-1461	HEAD ASSY. - Knife		21
F-EO-1463	HEAD - Knife	10	21
F-EO-1464	SPRING - Knife Head	11	21
F-EO-1469	BOLT - Knife Head	9	21
F-EO-1471	BLOCK - Rubber Stricker	27	9
F-EO-1472	BRACKET - Block Mounting	26	9
F-EO-1476	NUT - Tilt Adjusting	15	13
F-EO-1477	PIVOT - Tilt Adjusting	19	13
F-EO-1480	JOINT - Drag Bar Ball	1	13
F-EO-1483	RETAINER - Drag Ball	2	13
F-EO-1485	COLLAR - Tilt	5	13
F-EO-1488	WASHER - Tilt Clamp	20	13
F-EO-1492	COLLAR & SCREW ASSY.	17	13
F-EO-1495	COLLAR - Tilt	5	13

N. S. Indicates Not Serviced

NUMERICAL INDEX - Cont'd.

PART NO.	DESCRIPTION	REF.	PAGE
F-EO-1498	SUPPORT ASSY. - Driveshaft	13	7
F-EO-1500	FRAME - Lift	1	9
F-EO-1502	FRAME - Lift	1	9
F-EO-1504	SPACER - Knife Head	6	21
F-EO-1505	CONNECTOR - Knife Head	3	21
F-EO-1546	CHAIN ASSY. - Position	7	9
P-EO-1546	SHACKLE - Chain	5,8	9,10
N.S. F-EO-1556	HINGE - Drag Bar	6	13
N.S. F-EO-1557	HINGE - Drag Bar	6	13
F-EO-1559	BOLT - Hinge Cap	11	13
F-EO-1560	SPACER ASSY. - Cutter Bar	57	19
F-EO-1561	BEARING - Hinge	12	13
F-EO-1564	CLAMP - Tilt Collar	4	13
F-EO-1567	BUSHING - Hinge	9	13
F-EO-1590	LEVER ASSY. - Balance	9	10
F-EO-1595	CHAIN - Lift Lever	12	10
F-EO-1600	STRUT ASSY. - R.H.	21	9
F-EO-1604	STRUT ASSY. - L.H.	22	9
F-EO-1606-A	PIN - Strut Connecting	20	9
F-EO-1606-B	PIN - Strut Connecting	17	9
F-EO-1607	NUT - Strut Bearing	18	9
F-EO-1611	GUARD - Belt	40	15
F-EO-1612	BRACKET - Mounting	14	13
F-EO-1615	GUARD - Belt	40	15
F-EO-1621	BRACKET ASSY. - Support	39	15
F-EO-1624	PULLEY - Belt Idler	36	15
F-EO-1625	SHAFT - Idler Pulley	37	15
F-EO-1626	CLIP - Belt Retaining	38	15
F-EO-1627	ARM ASSY. - Idler	23	15
F-EO-1636	STRUT ASSY. - Top	13	9
F-EO-1663	PIN - Pull Rod	7	11
F-EO-1671	GUARD - Drive Pulley	6	7
F-EO-1672	COVER - Pulley Guard	2	7
F-EO-3913	SPACER - Inner Shoe	56	19
F-EO-3920	SHOE ASSY. - Inner	54	19
F-EO-3924	SOLE ASSY. - Shoe	6	22
F-EO-3925	SUPPORT - Inner Shoe	34	17
F-EO-3927	PLATE - Inner Shoe Ledger		17
6F-EO-3941	BAR - Cutter - 6 Ft.	26	21
7F-EO-3941	BAR - Cutter - 7 Ft.	26	21
F-EO-3942	PLATE - Inner Shoe	36	17
F-EO-3943	PLATE - Knife Clip	24	21
P-EO-3946	PLATE - Outer Shoe	3	22
N.S. F-EO-3947	SHOE - Outer	4	22
F-EO-3950	SHOE ASSY. - Outer	1	22
F-EO-3954	ROD - Grass	52	19
P-EO-3965	RIVET - Countersunk Head	2	22
P-EO-3966	RIVET - Countersunk Head	2	22
P-6234	RETAINER - Joint	34	7
P-6235	WASHER - Cork	35	7
P-6236	CENTER - Cross	36	7
P-6237	BUSHING - Cross	33	7
P-6238	RING - Snap	32	7
F-EO-6572	CAP - Spring	5	10
F-EO-6573	CAP - Spring	3	10
F-EO-6575	CAP - Detent Housing	1	11
F-EO-6811	CATCH - Position Control	11	9
F-EO-6812	SPACER - Catch	10	9
F-EO-7001	SPRING - Detent	2	11
F-EO-7006	HOUSING ASSY. - Detent	5	11
F-EO-7013	BAR ASSY. - Pull	6	11
F-EO-7015	STOP - Pull Bar	11	11
P-EO-7022-A	SPRING - Swathboard	8	22
F-EO-7030	SPRING ASSY. - Balance		10
A-EO-A7031	SPRING - Balance	2	10
F-EO-7468	ROD & EYE Assy. - Transport	3	9
F-EO-7802	PLUNGER - Detent	4	11
F-EO-7822	WASHER - Detent Plunger	3	11
F-EO-8003	YOKE - Pull Bar	13	11
F-EO-8005	BEARING - Pull Bar	15	11
F-EO-8006	WASHER - Pull Bar	14,16	11,11
F-EO-8950	SHAFT ASSY. - P.T.O.	24	7
F-EO-8951	YOKE - Front	25	7
F-EO-8952	YOKE & SLEEVE ASSY.	26	7
F-EO-8958	YOKE & SHAFT ASSY.	28	7
F-EO-8959	YOKE - Rear	29	7
F-EO-9480	SHIELD ASSY. - P.T.O.	23	7
F-EO-9490	SWATHBOARD ASSY.		22
F-EO-9491	SWATHBOARD ASSY.	10	22
A-EO-B9497	CLAMP - Grass Stick	14	22
A-EO-B9498	STICK - Grass	15	22
F-EO-9510	BOLT - Balance Spring	1	10
F-EO-9521	U-BOLT - Balance Spring	4	10
S-9600	BEARING ASSY. - Ball	47	19
F-EO-9630	BOLT - Swathboard	11	22
A-TO-9635	BRACKET ASSY.		9
A-TO-9637	BRACKET ASSY.		9
A-TO-9662	LINK - Stay		9
F-EO-9681	WASHER - Swathboard	9	22
A-EO-A9701	LOCK - Transport Rod	2	9
S-9701-A	SCREW - Housing to Housing	9	17
S-9702	BOLT - Arm to Bar Assy.	22	15
F-EO-9708	SHIM - Wear Plate	25	21
S-9708	SCREW - Retainer Locking	21	7
S-9765	SCREW - Set	25	17
S-9878	BEARING - Roller	15	7
S-9887-A	BEARING - Needle	4	21
S-9887-B	BEARING - Needle		19
S-9888	BEARING - Ball	9	7
S-9889	BEARING - Ball	35	15
S-9894	BEARING ASSY. - Ball	11,14	17,17
S-9896	BEARING ASSY. - Ball	16	17
S-9898	BEARING ASSY. - Ball	6	17
S-9916	SEAL - Oil	5	19,21
S-9917	SEAL - Oil	18	7
S-10093	KIT - Universal Joint	30	7
S-10151	RING - Snap	10,15	17,17
S-10153	RING - Snap	5	17
S-10154	RING - Snap	7	17
S-10180	RING - Snap	17	7
S-10181	RING - Snap	8,10	7, 7
S-10182	RING - Snap	7	7
S-10183	RING - Snap	34	15
S-10214-T	PIN - Clevis	6, 7	9,10
S-10214-U	PIN - Clevis	11	10
S-10215-H	PIN - Clevis	15	10
S-10520	V-BELT	38	7
S-10521	V-BELT	38	7
S-34090	NUT - Hex	22	15
S-62292	RIVET - Flat Head		21

N.S. Indicates Not Serviced

STANDARD PARTS INDEX

PART NO.	DESCRIPTION	PAGE
31-001-238	BOLT - Hex Head	7
44-001-56	BOLT - Hex Head	13
44-001-75	BOLT - Hex Head	21
44-001-88	BOLT - Hex Head	9
44-001-100	BOLT - Hex Head	9
44-001-188	BOLT - Hex Head	17
44-001-212	BOLT - Hex Head	11
44-001-238	BOLT - Hex Head	15
44-001-250	BOLT - Hex Head	9
44-001-438	BOLT - Hex Head	9
44-001-638	BOLT - Hex Head	11
62-001-388	BOLT - Hex Head	13
31-011-125	BOLT - Carriage	22
31-011-250	BOLT - Carriage	22
44-011-75	BOLT - Carriage	15
44-011-88	BOLT - Carriage	15
44-011-138	BOLT - Carriage	19
44-011-175	BOLT - Carriage	19
44-011-212	BOLT - Carriage	22
44-011-450	BOLT - Carriage	19
62-011-125	BOLT - Carriage	15
62-011-238	BOLT - Carriage	13
62-011-300	BOLT - Carriage	13
62-011-438	BOLT - Carriage	13
44-031-100	BOLT - Plow	21, 22
44-031-131	BOLT - Plow	21
44-031-138	BOLT - Plow	21
44-101-88	SCREW - Cap	7
44-101-100	SCREW - Cap	7
44-101-175	SCREW - Cap	9, 17
44-101-250	SCREW - Cap	17
62-101-112	SCREW - Cap	9
19-112-88	SCREW - Round Head	9
25-112-38	SCREW - Round Head	17
25-125-200	PIN - Groove	7
19-325-88	PIN - Groove	13
38-325-175	PIN - Groove	11
12-05-88	PIN - Cotter	9, 10
12-05-100	PIN - Cotter	9, 22
16-05-150	PIN - Cotter	11
19-05-100	PIN - Cotter	10
22-06-56	RIVET - Button Head	21
22-06-75	RIVET - Button Head	21
25-09-100	KEY - Woodruff	7, 17
25-09-125	KEY - Woodruff	7
22-16-56	RIVET - Countersunk Head	21
22-16-112	RIVET - Countersunk Head	17
25-16-62	RIVET - Countersunk Head	21
25-16-75	RIVET - Countersunk Head	21
19-14	WASHER - Lock	9
31-14	WASHER - Lock	7, 22
38-14	WASHER - Lock	15
44-14	WASHER - Lock	7
62-14	WASHER - Lock	9
19-104	WASHER - Flat	9
31-104	WASHER - Flat	22
38-104	WASHER - Flat	15
44-104	WASHER - Flat	7
62-104	WASHER - Flat	13, 15
44-204	WASHER - Flat	19, 21
62-204	WASHER - Flat	7, 17
31-003	NUT - Hex	7, 22
38-003	NUT - Hex	10, 15
44-003	NUT - Hex	9
62-003	NUT - Hex	9
44-013	NUT - Slotted Hex	22
44-1003	NUT - Hex Jam	21
62-1003	NUT - Hex Jam	7
19-2103	NUT - Hex Machine	9
25-007	FITTING - Lubrication	7
12-3107	FITTING - Lubrication	7
25-6007	FITTING - Lubrication	11

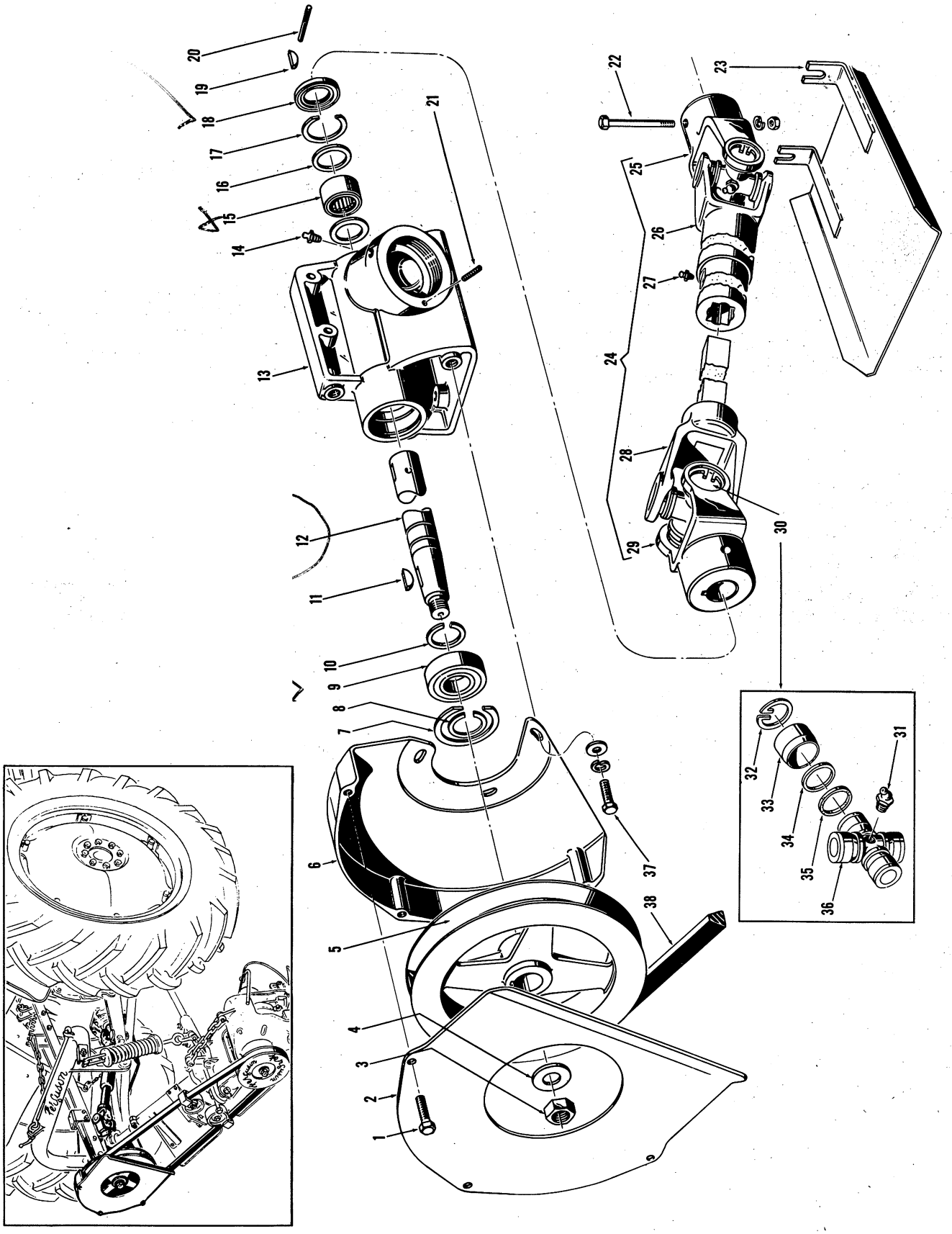
1
2
3
4
5
6
7
8
9
10
11
12
13
14
15
16
17
18
19
20
21
22
23
24
25
26
27
28
29
30
31
32
33
34
35
36
37
38

FIG. 1

F-EO-20 and 30 AGRICULTURAL MOWER PARTS LIST

REF. NO.	PART NO.	FIG. 1 PULLEY, GUARD, DRIVE SHAFT AND RELATED PARTS	QUAN. REQ'D. F-EO 20	QUAN. REQ'D. F-EO 30
1	44-101-88	SCREW - Cap - Guard to Cover	3	3
2	F-EO-1672	COVER - Pulley Guard	1	1
3	62-1003	NUT - Hex Jam - Pulley to Drive Shaft	1	1
4	62-204	WASHER - Flat	1	1
5	F-EO-1455	PULLEY - Drive	1	1
6	F-EO-1671	GUARD - Drive Pulley	1	1
7	S-10182	RING - Snap - Bearing to Housing	1	1
8	S-10181	RING - Snap - Bearing to Drive Shaft	1	1
9	S-9888	BEARING - Ball	1	1
10	S-10181	RING - Snap - Bearing to Drive Shaft	1	1
11	25-09-100	KEY - Woodruff	1	1
12	F-EO-1454	DRIVESHAFT . sub 667842 M1	1	1
13	F-EO-1498	SUPPORT ASSEMBLY - Driveshaft Composed of Support which is not Serviced and Item 14	1	1
14	25-007	FITTING - Lubrication	1	1
15	S-9878	BEARING - Roller	1	1
16	F-EO-1453	SHIELD - Bearing	2	2
17	S-10180	RING - Snap - Bearing to Housing	1	1
18	S-9917	SEAL - Oil	1	1
19	25-09-125	KEY - Woodruff - Yoke to Shaft	1	1
20	25-125-200	PIN - Groove - Yoke to Shaft	1	1
21	S-9708	SCREW - Set - Locking Drag Ball Retainer	1	1
22	31-001-238	BOLT - Hex Head - Front Yoke to P. T. O. Shaft	1	1
	31-14	WASHER - Lock	1	1
	31-003	NUT - Hex	1	1
23	F-EO-9480	SHIELD ASSEMBLY - P. T. O.	1	1
24	F-EO-8950	SHAFT ASSEMBLY - P. T. O. Composed of Items 25 thru 30	1	1
25	F-EO-8951	YOKE - Front	1	1
26	F-EO-8952	YOKE AND SLEEVE ASSEMBLY - Front	1	1
27	25-007	FITTING - Lubrication	1	1
28	F-EO-8958	YOKE AND SHAFT ASSEMBLY - Rear	1	1
29	F-EO-8959	YOKE - Rear	1	1
30	S-10093	KIT - Universal Joint Service. Composed of Items 31 thru 36	2	2
31	12-3107	FITTING- Lubrication	1	1
32	P-6238	RING - Snap	4	4
33	P-6237	BUSHING - Center Cross	4	4
34	P-6234	RETAINER - Joint	4	4
35	P-6235	WASHER - Cork	4	4
36	P-6236	CENTER - Cross	1	1
37	44-101-100	SCREW - Cap - Guard to Support	3	3
	44-14	WASHER - Lock	3	3
	44-104	WASHER - Flat	3	3
38	S-10520	V-BELT	1	
	S-10521	V-BELT		1

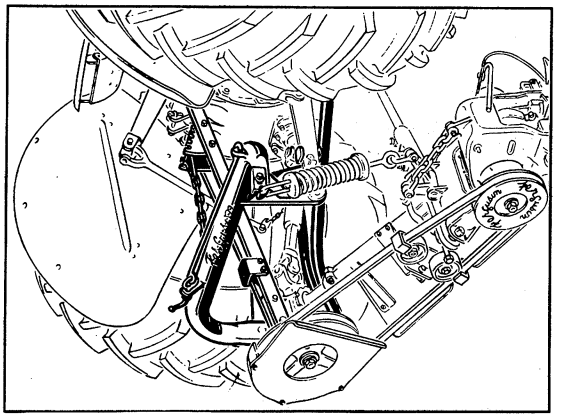

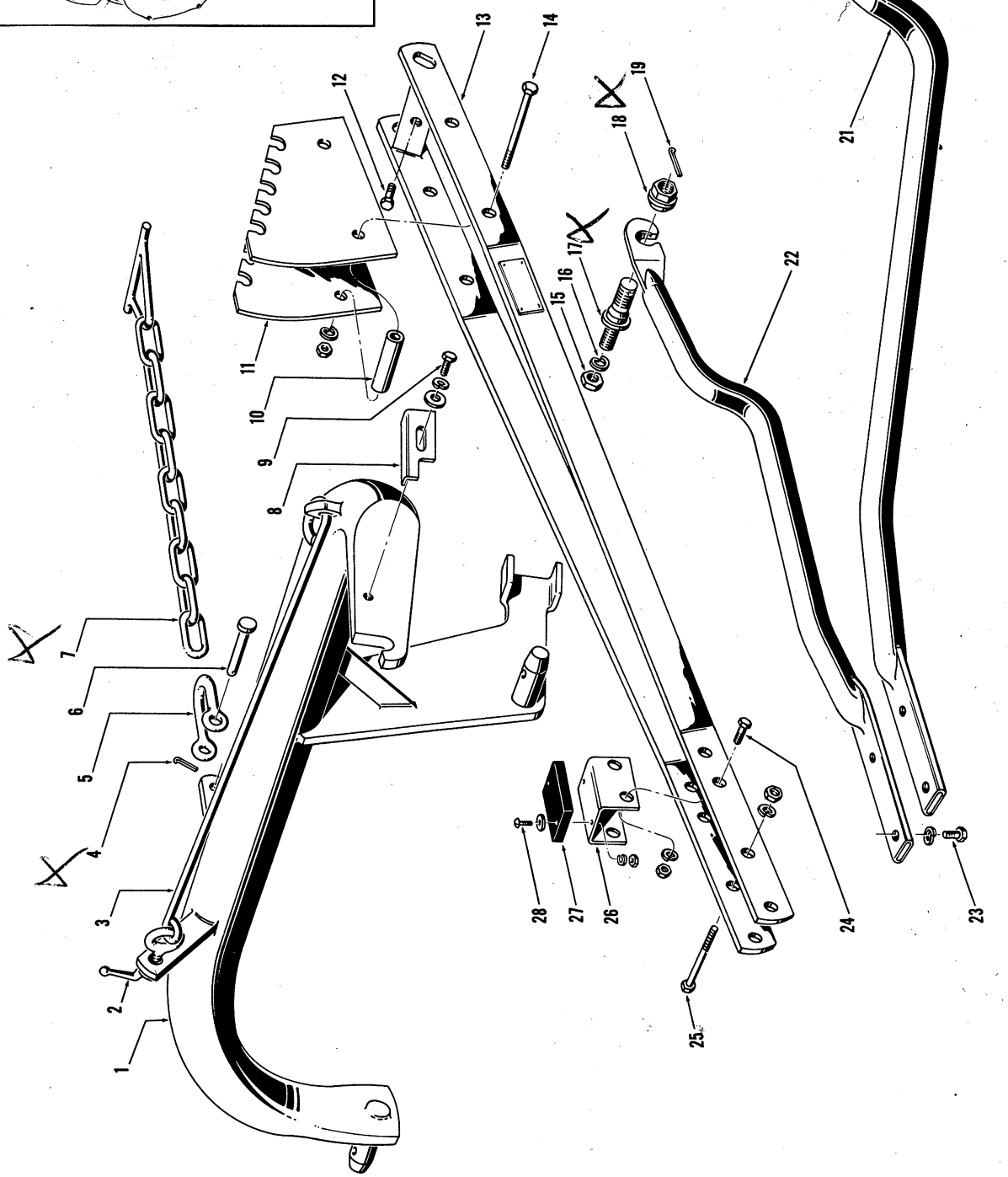

FIG. 2

F-EO-20 and 30 AGRICULTURAL MOWER PARTS LIST

REF. NO.	PART NO.	FIG. 2 FRAME ASSEMBLY AND RELATED PARTS	QUAN. REQ'D. F-EO 20	QUAN. REQ'D. F-EO 30
1	F-EO-1500	FRAME ASSEMBLY	1	
	F-EO-1502	FRAME ASSEMBLY		1
2	A-EO-A9701	LOCK - Transport Rod	1	1
3	F-EO-7468	ROD AND EYE ASSEMBLY - Transport	1	1
4	12-05-88	PIN - Cotter	1	1
5	P-EO-1546	SHACKLE - Chain Assembly	1	1
6	S-10214-T	PIN - Clevis - Shackle to Frame	1	1
7	F-EO-1546	CHAIN ASSEMBLY - Position Control	1	1
8	F-EO-1459	RETAINER - Spring	1	1
9	44-001-88	BOLT - Hex Head - Retainer to Frame	1	1
	44-14	WASHER - Lock	1	1
	44-104	WASHER - Flat	1	1
10	F-EO-6812	SPACER - Catch	2	2
11	F-EO-6811	CATCH - Position Control	2	2
12	62-101-112	SCREW - Cap - Strut Tightening	1	1
13	F-EO-1636	STRUT ASSEMBLY - Top	1	1
14	44-001-438	BOLT - Hex Head - Catch to Strut	2	2
	44-14	WASHER - Lock	2	2
	44-003	NUT - Hex	2	2
15	62-003	NUT - Hex - Pin to Stabilizer Bracket	2	2
16	62-14	WASHER - Lock	2	2
17	F-EO-1606-B	PIN - Strut Connecting - L. H.	1	1
18	F-EO-1607	NUT - Strut Bearing	2	2
19	12-05-100	PIN - Cotter	2	2
20	F-EO-1606-A	PIN - Strut Connecting - R. H.	1	1
21	F-EO-1600	STRUT ASSEMBLY - R. H. - Lower	1	1
22	F-EO-1604	STRUT ASSEMBLY - L. H. - Lower	1	1
23	44-101-175	SCREW - Cap - Strut to Support	4	4
	44-14	WASHER - Lock	4	4
24	44-001-100	BOLT - Hex Head - Bracket to Strut Assy.	4	4
	44-14	WASHER - Lock	4	4
	44-003	NUT - Hex	4	4
25	44-001-250	BOLT - Hex Head - Strut to Support	2	2
	44-14	WASHER - Lock	2	2
	44-003	NUT - Hex	2	2
26	F-EO-1472	BRACKET - Block Mounting	1	1
27	F-EO-1471	BLOCK - Rubber Stricker	1	1
28	19-112-88	SCREW - Round Head Machine - Block to Bracket	2	2
	19-104	WASHER - Flat	2	2
	19-14	WASHER - Lock	2	2
	19-2103	NUT - Hex	2	2
		NOTE: The following components of A-TO-59 Stabilizer Kit are required for use with this mower. See Tractor Parts Book page 100 for illustration.		
	A-TO-9635	BRACKET, ANCHOR AND LINCH PIN ASSEMBLY - R. H.	1	1
	A-TO-9637	BRACKET, ANCHOR AND LINCH PIN ASSEMBLY - L. H.	1	1
	A-TO-9662	LINK - Stay	1	1

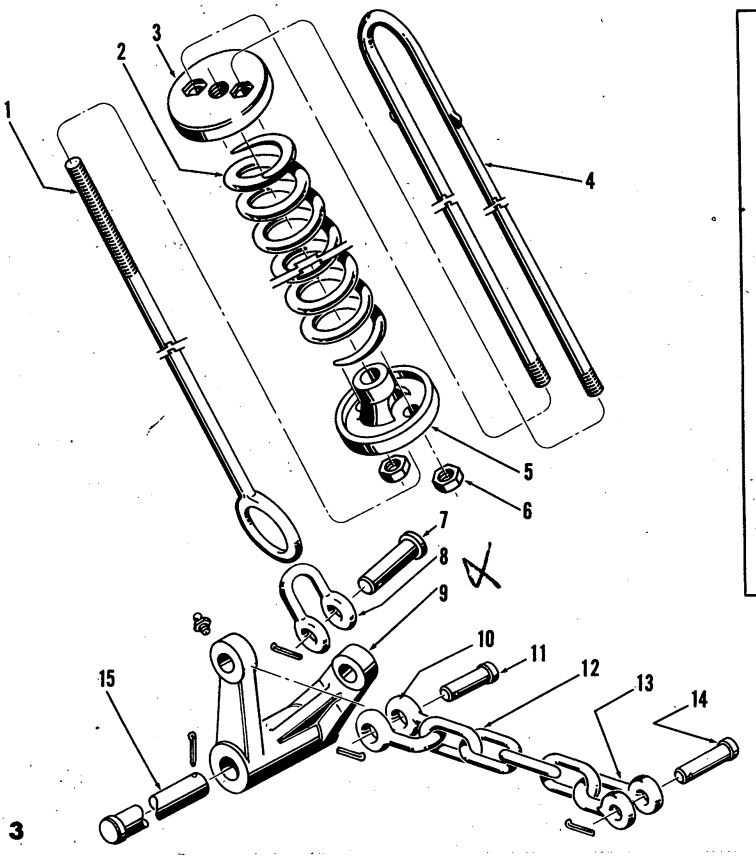

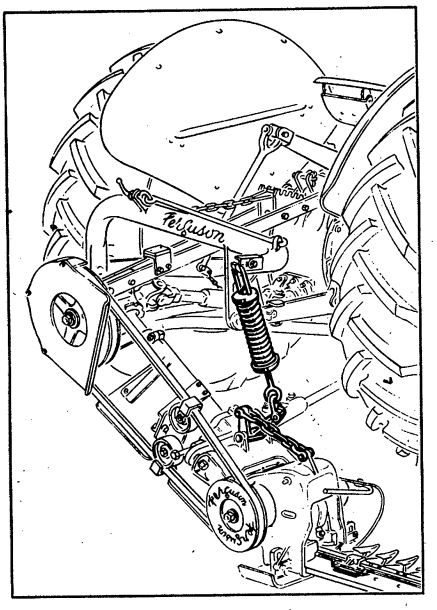

FIG. 3

REF. NO.	PART NO.	FIG. 3 BALANCE SPRING	QUAN. REQ'D. F-EO 20	QUAN. REQ'D. F-EO 30
	F-EO-7030	SPRING ASSEMBLY - Balance Composed of Items 1 thru 6	1	1
1	F-EO-9510	BOLT - Balance Spring Eye	1	1
2	A-EO-A7031	SPRING - Balance	1	1
3	F-EO-6573	CAP - Spring - Upper	1	1
4	F-EO-9521	U-BOLT - Balance Spring	1	1
5	F-EO-6572	CAP - Spring - Lower	1	1
6	38-003	NUT - Hex - U-Bolt	2	2
7	S-10214-T	PIN - Clevis - Eye Bolt Shackle to Lever	1	1
	12-05-88	PIN - Cotter	1	1
8	P-EO-1546	SHACKLE - Eye Bolt to Lever	1	1
9	F-EO-1590	LEVER ASSEMBLY - Cutter Bar Balance Composed of Lever which is not Serviced and	1	1
	25-007	FITTING - Lubrication	1	1
10	P-EO-1546	SHACKLE - Chain to Lever	1	1
11	S-10214-U	PIN - Clevis - Shackle to Lever	1	1
	12-05-88	PIN - Cotter	1	1
12	F-EO-1595	CHAIN - Lift Lever	1	1
13	P-EO-1546	SHACKLE - Chain to Drag Bar	1	1
14	S-10214-U	PIN - Clevis - Shackle to Drag Bar	1	1
	12-05-88	PIN - Cotter	1	1
15	S-10215-H	PIN - Clevis - Lever to Drag Bar	1	1
	19-05-100	PIN - Cotter	1	1

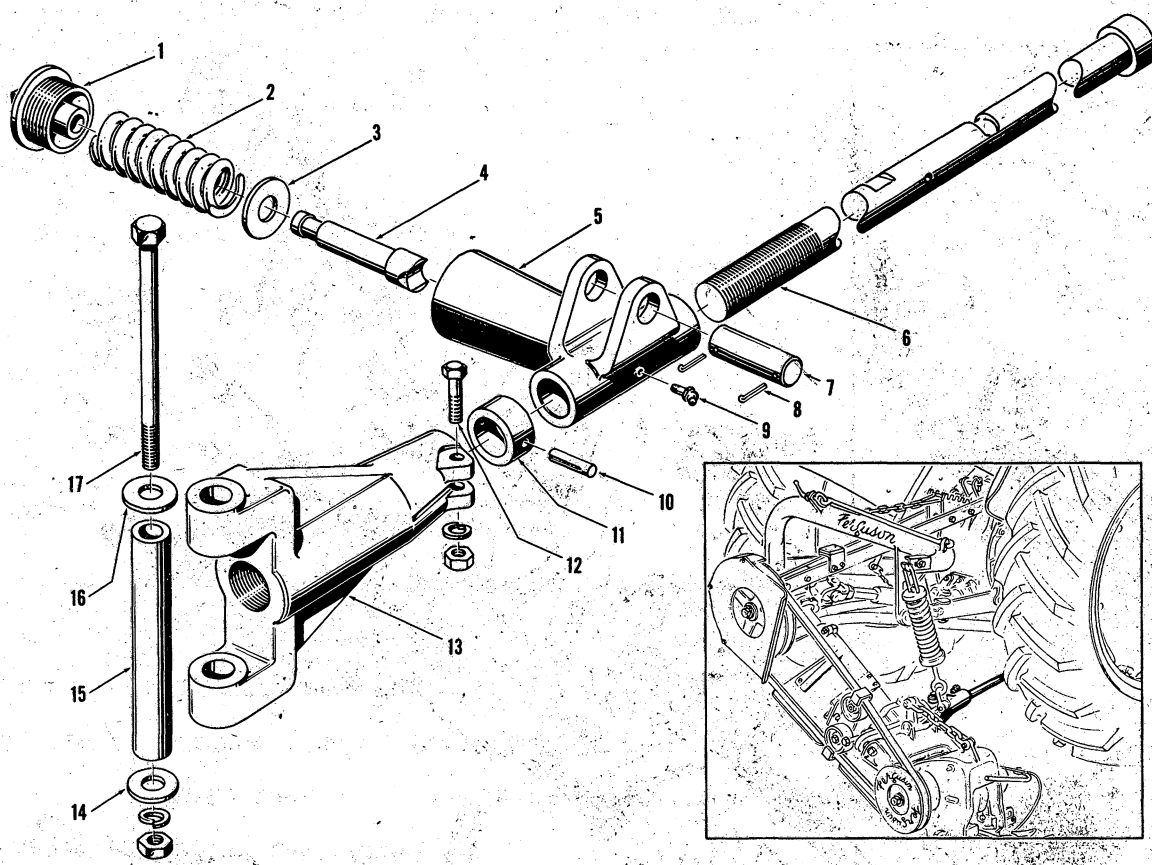

FIG. 4

REF. NO.	PART NO.	FIG. 4 DETENT AND PULL BAR ASSEMBLY	QUAN. REQ'D. F-EO 20	QUAN. REQ'D. F-EO 30
1	F-EO-6575	CAP - Detent Housing	1	1
2	F-EO-7001	SPRING - Detent	1	1
3	F-EO-7822	WASHER - Detent Plunger	1	1
4	F-EO-7802	PLUNGER - Detent	1	1
5	F-EO-7006	HOUSING ASSEMBLY - Detent Composed of Housing which is not Serviced and Item 9	1	1
6	F-EO-7013	BAR ASSEMBLY - Pull	1	1
7	F-EO-1663	PIN - Pull Rod	1	1
8	16-05-150	PIN - Cotter	1	1
9	25-6007	FITTING - Lubrication - Housing	1	1
10	38-325-175	PIN - Groove - Stop to Bar Assembly	1	1
11	F-EO-7015	STOP - Pull Bar	1	1
12	44-001-212	BOLT - Hex Head - Yoke to Pull Rod	1	1
	44-14	WASHER - Lock	1	1
	44-003	NUT - Hex	1	1
13	F-EO-8003	YOKE - Pull Bar	1	1
14	F-EO-8006	WASHER - Pull Bar Yoke	1	1
15	F-EO-8005	BEARING - Pull Bar	1	1
16	F-EO-8006	WASHER - Pull Bar Yoke	1	1
17	44-001-638	BOLT - Hex Head - Yoke to Tilt Collar	1	1
	44-14	WASHER - Lock	1	1
	44-003	NUT - Hex	1	1

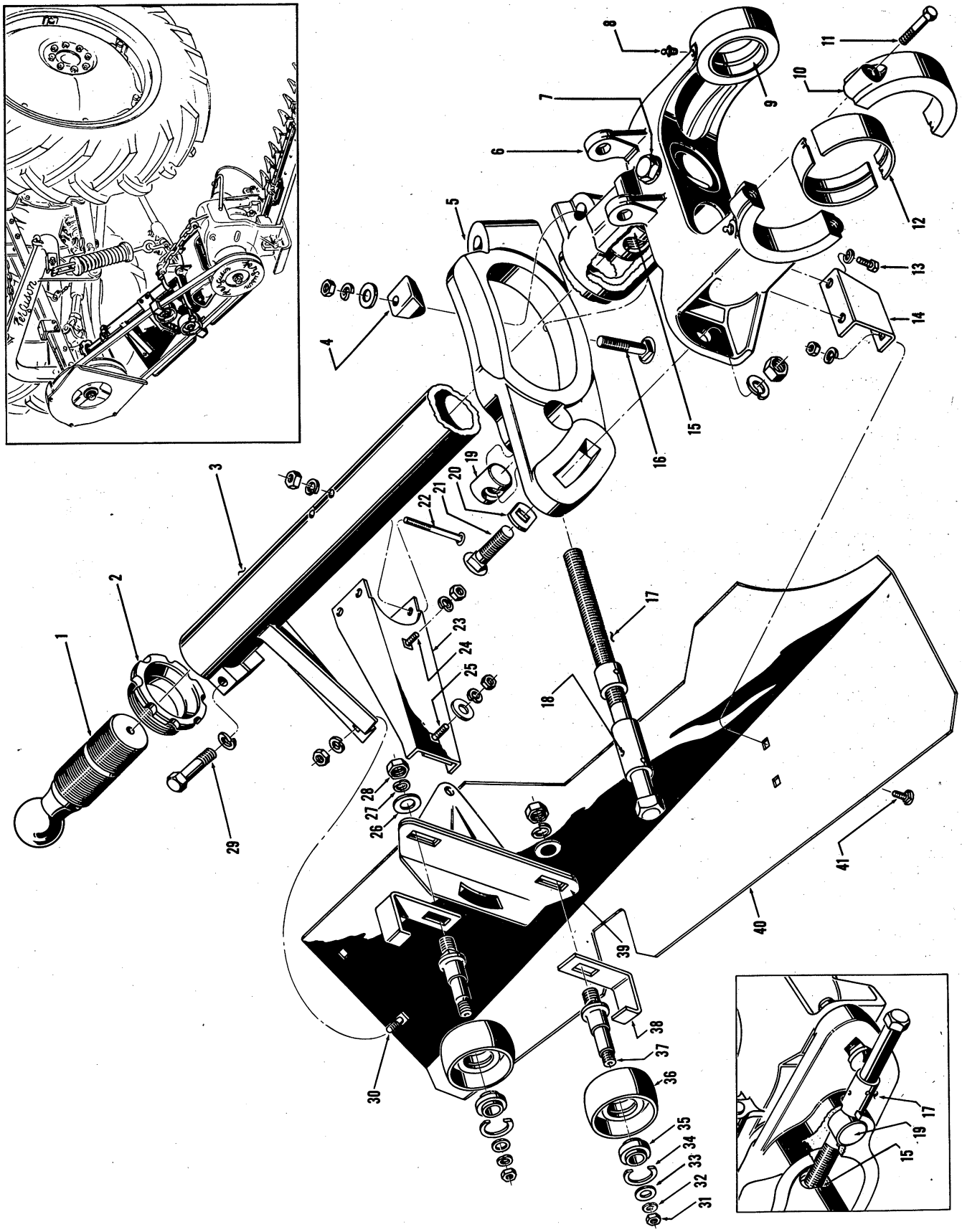
1
2
3
4
5
6
7
8
9
10
11
12
13
14
15
16
17
18
19
20
21
22
23
24
25
26
27
28
29
30
31
32
33
34
35
36
37
38
39
40
41

FIG. 5

F-EO-20 and 30 AGRICULTURAL MOWER PARTS LIST

REF. NO.	PART NO.	FIG. 5 DRAG BAR AND RELATED PARTS	QUAN. REQ'D. F-EO 20	QUAN. REQ'D. F-EO 30
1	F-EO-1480	JOINT - Drag Bar Ball	1	1
2	F-EO-1483	RETAINER - Drag Ball Joint	1	1
3	F-EO-1278	BAR ASSEMBLY - Drag	1	
	F-EO-1279	BAR ASSEMBLY - Drag - Not Illustrated Composed of Bar & Items 6 and 10 which are Not Serviced and Items 7, 8, 9, 11 and 12 which are Serviced Separately		1
4	F-EO-1564	CLAMP - Tilt Collar	1	1
5	F-EO-1485	COLLAR - Tilt	1	
	F-EO-1495	COLLAR - Tilt - Not Illustrated		1
6	F-EO-1556	HINGE - Drag Bar - Not Serviced - Order F-EO-1278		
	F-EO-1557	HINGE - Drag Bar - Not Serviced - Order F-EO-1279		
7	62-001-388	BOLT - Hex Head - Bar to Hinge - Shown in Position	1	1
	62-14	WASHER - Lock	1	1
	62-003	NUT - Hex	1	1
8	25-007	FITTING - Lubrication	2	2
9	F-EO-1567	BUSHING - Hinge - Shown in Position	1	1
10		CAP - Hinge - Not Serviced - Order F-EO-1278 or F-EO-1279		
11	F-EO-1559	BOLT - Cap to Hinge	2	2
12	F-EO-1561	BEARING - Hinge	2	2
13	44-001-56	BOLT - Hex Head - Bracket to Bar Assembly	2	2
	44-14	WASHER - Lock	2	2
14	F-EO-1612	BRACKET - Mounting	1	1
15	F-EO-1476	NUT - Tilt Adjusting - Shown in Position	1	1
16	62-011-438	BOLT - Carriage - Clamp to Bar Assy.	1	1
	62-104	WASHER - Flat	1	1
	62-14	WASHER - Lock	1	1
	62-003	NUT - Hex	1	1
17	F-EO-1492	SCREW AND COLLARS ASSEMBLY - Tilt Adjusting Composed of Screw and Collars which are not Serviced Separately and Item 18	1	1
18	19-325-88	PIN - Groove - Collars to Screw	3	3
19	F-EO-1477	PIVOT - Tilt Adjusting	1	1
20	F-EO-1488	WASHER - Tilt Clamp	1	1
21	62-011-238	BOLT - Carriage - Tilt Collar to Drag Bar	1	
	62-011-300	BOLT - Carriage - Tilt Collar to Drag Bar		1
	62-14	WASHER - Lock	1	1
	62-003	NUT - Hex	1	1

Continued on Page 15

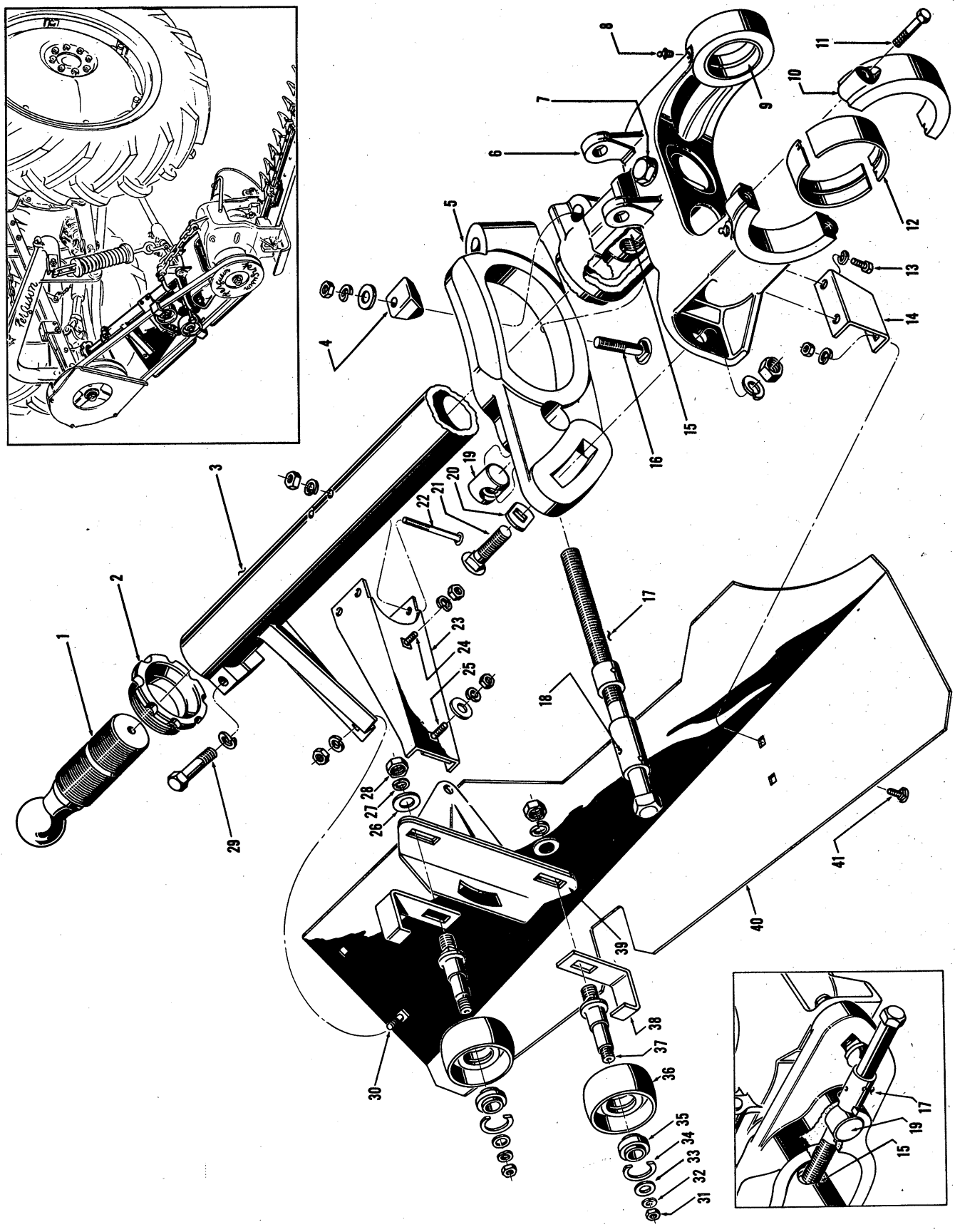
1
2
3
4
5
6
7
8
9
10
11
12
13
14
15
16
17
18
19
20
21
22
23
24
25
26
27
28
29
30
31
32
33
34
35
36
37
38
39
40
41

FIG. 5

F-EO-20 and 30 AGRICULTURAL MOWER PARTS LIST

REF. NO.	PART NO.	FIG. 5 DRAG BAR AND RELATED PARTS - Cont'd.	QUAN. REQ'D. F-EO 20	QUAN. REQ'D. F-EO 30
22	S-9702	BOLT - Carriage - Arm to Bar Assembly	2	2
	44-14	WASHER - Lock	2	2
	S-34090	NUT - Hex	2	2
23	F-EO-1627	ARM ASSEMBLY - Idler Mounting	1	1
24	44-011-88	BOLT - Carriage - Arm Assy. to Idler Bracket	1	1
	44-14	WASHER - Lock	1	1
	44-003	NUT - Hex	1	1
25	62-011-125	BOLT - Carriage - Bracket to Arm	1	1
	62-104	WASHER - Flat	1	1
	62-14	WASHER - Lock	1	1
	62-003	NUT - Hex	1	1
26	44-104	WASHER - Flat	2	2
27	44-14	WASHER - Lock	2	2
28	44-003	NUT - Hex	2	2
29	44-001-238	BOLT - Hex Head - Drag Bar Clamp to Joint	1	1
	44-104	WASHER - Lock	1	1
30	44-011-75	BOLT - Carriage - Guard to Bar Assembly	2	2
	44-14	WASHER - Lock	2	2
	44-003	NUT - Hex	2	2
31	38-003	NUT - Hex - Pulley to Spindle	2	2
32	38-14	WASHER - Lock	2	2
33	38-104	WASHER - Flat	2	2
34	S-10183	RING - Snap	2	2
35	S-9889	BEARING - Ball - Pulley	2	2
36	F-EO-1624	PULLEY - Belt Idler	2	2
37	F-EO-1625	SHAFT - Idler Pulley	2	2
38	F-EO-1626	CLIP - Belt Retaining	2	2
39	F-EO-1621	BRACKET ASSEMBLY - Belt Support	1	1
40	F-EO-1611	GUARD - Belt	1	
	F-EO-1615	GUARD - Belt - Not Illustrated		1
41	44-011-75	BOLT - Carriage - Guard to Mounting Bracket	2	2
	44-14	WASHER - Lock	2	2
	44-003	NUT - Hex	2	2

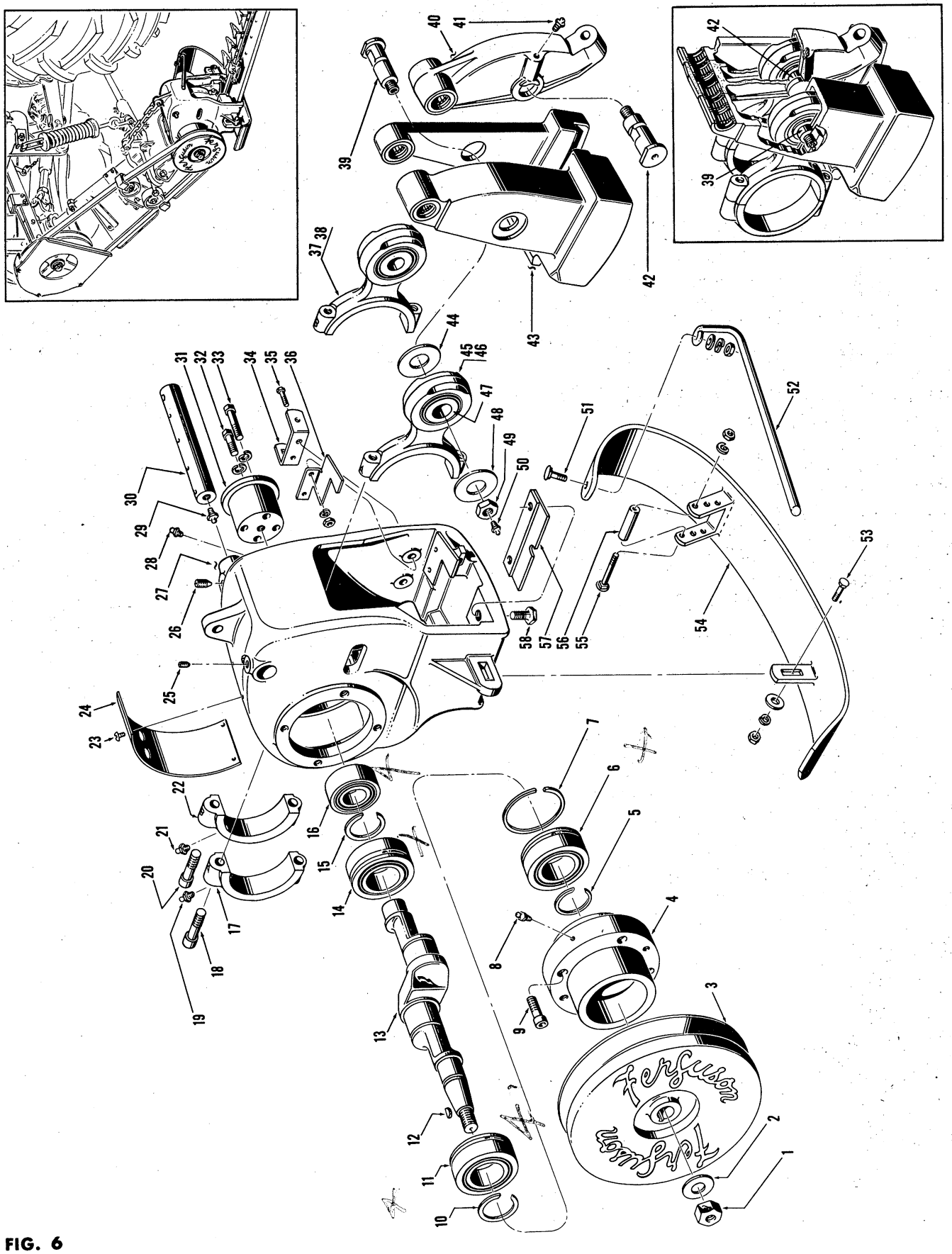

FIG. 6

F-EO-20 and 30 AGRICULTURAL MOWER PARTS LIST

REF. NO.	PART NO.	FIG. 6 DRIVE UNIT ASSEMBLY	QUAN. REQ'D. F-EO 20	QUAN. REQ'D. F-EO 30
	F-EO-1400	DRIVE UNIT ASSEMBLY. . . . . Composed of Items 1 thru 50	1	1
1	62-003	NUT - Hex - Pulley to Crankshaft	1	1
2	62-204	WASHER - Flat	1	1
3	F-EO-1439	PULLEY - Driven	1	1
4	F-EO-1405	HOUSING - Rear Bearing.	1	1
5	S-10153	RING - Snap	1	1
6	S-9898	BEARING AND SEALS ASSEMBLY - Crankshaft	1	1
7	S-10154	RING - Snap	1	1
8	25-007	FITTING - Lubrication - Bearing Housing	1	1
9	S-9701-A	SCREW - Hex Socket Head - Housing to Housing	4	4
10	S-10151	RING - Snap - Bearing Retainer	1	1
11	S-9894	BEARING AND SEALS ASSEMBLY - Ball.	1	1
12	25-09-100	KEY - Woodruff - Crankshaft	1	1
13	F-EO-1406	CRANKSHAFT.	1	1
14	S-9894	BEARING AND SEALS ASSEMBLY - Ball.	1	1
15	S-10151	RING - Snap - Bearing Retainer	1	1
16	S-9896	BEARING AND SEALS ASSEMBLY - Ball.	1	1
17	F-EO-1409	CAP R. H. - Not Serviced - Order F-EO-1404 - See Reference 45		
18	F-EO-1413	SCREW - Hex Socket Head - Cap to Rod.	2	2
19	25-007	FITTING - Lubrication - Connecting Rod Cap	1	1
20	F-EO-1413	SCREW - Hex Socket Head - Cap to Rod.	2	2
21	25-007	FITTING - Lubrication - Connecting Rod Cap	1	1
22	F-EO-1411	CAP L. H. - Not Serviced - Order F-EO-1403 - See Reference 37		
23	25-112-38	SCREW - Machine - Cover to Housing	4	4
24	F-EO-1408	PLATE - Cover	1	1
25	S-9765	SCREW - Hex Socket Set	1	1
26	F-EO-1436	SCREW - Hex Socket Set	1	1
27	F-EO-1401	HOUSING ASSEMBLY - Drive Unit . . . . . Composed of Housing which is not Serviced, Item 28 and	1	1
	F-EO-3927	PLATE - Ledger - Inner Plate - Shown in Position	1	1
	22-16-112	RIVET - C' Sunk Head - Plate to Housing	2	2
28	25-007	FITTING - Lubrication	1	1
29	25-007	FITTING - Lubrication - Lever Pivot Pin	1	1
30	F-EO-1435	PIN - Lever Pivot	1	1
31	F-EO-1410	HUB - Front	1	1
32	44-101-175	SCREW - Cap - Plug	1	1
	44-14	WASHER - Lock	1	1
33	44-101-250	SCREW - Cap - Hub to Housing	4	4
	44-14	WASHER - Lock	4	4
34	F-EO-3925	SUPPORT - Inner Shoe	1	1
35	44-001-188	BOLT - Support to Housing to Plate	2	2
	44-14	WASHER - Lock	2	2
	44-003	NUT - Hex	2	2
36	F-EO-3942	PLATE - Wear - Inner Shoe	1	1

Continued on Page 19

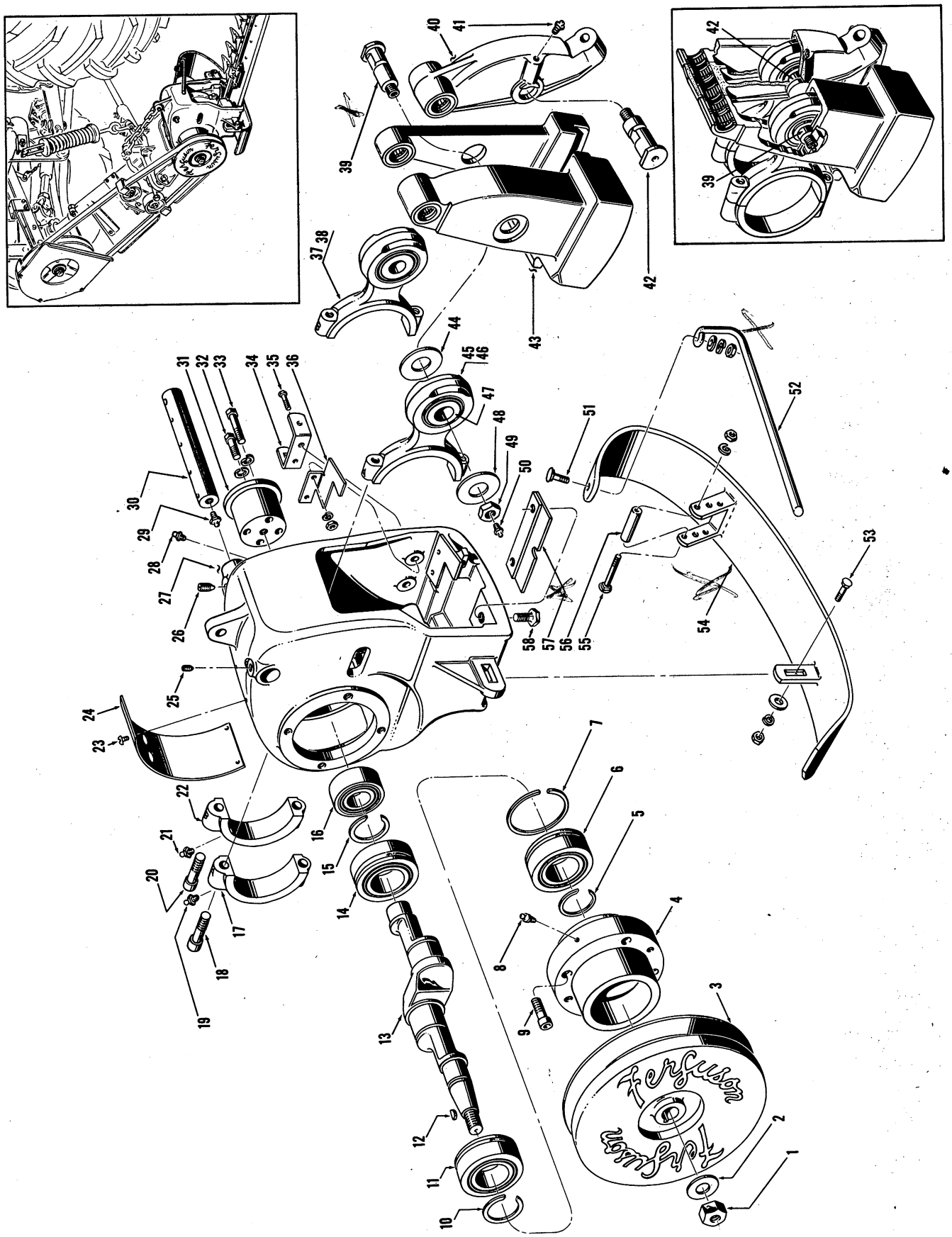

FIG. 6

REF. NO.	PART NO.	FIG. 6 DRIVE UNIT ASSEMBLY - Cont'd.	QUAN. REQ'D. F-EO 20	QUAN. REQ'D. F-EO 30
37	F-EO-1403	ROD AND CAP ASSEMBLY L. H. - Connecting Composed of Items 22 and 38 which are not serviced, and Item 20	1	1
38	F-EO-1417	ROD - Connecting L. H. - Not Serviced - See Ref. 37.		
39	F-EO-1431	BOLT - Conn. Rod Bearing to Counter Weight	1	1
40	F-EO-1418	LEVER ASSEMBLY - Knife Composed of Lever which is not Serviced, Item 41 and	1	1
	S-9887-B	BEARING - Needle - Shown in Position	2	2
	S-9916	SEAL - Oil - Shown in Position	2	2
41	25-007	FITTING - Lubrication	1	1
42	F-EO-1432	BOLT - Conn. Rod Bearing to Knife Lever	1	1
43	F-EO-1424	COUNTERWEIGHT ASSEMBLY Composed of Counterweight which is not Serviced and	1	1
	S-9887-B	BEARING - Needle - Shown in Position	3	3
	S-9916	SEAL - Oil - Shown in Position	4	4
44	F-EO-1414	SHIELD - Connecting Rod Bearing	2	2
45	F-EO-1404	ROD AND CAP ASSEMBLY R. H. - Connecting Composed of Items 17 and 46 which are not Serviced and Item 18	1	1
46	F-EO-1416	ROD - Connecting - R. H. - Not Serviced - See Ref. 45		
47	S-9600	BEARING AND SEALS ASSY. - Ball - Shown in Position	2	2
48	F-EO-1414	SHIELD - Connecting Rod Bearing	2	2
49	F-EO-1434	NUT - Connecting Rod Bearing Bolts	2	2
50	25-007	FITTING - Lubrication - Conn. Rod Bolt	2	2
51	44-011-138	BOLT - Carriage - Grass Rod to Inner Shoe	1	1
	44-104	WASHER - Flat	1	1
	44-14	WASHER - Lock	1	1
	44-003	NUT - Hex	1	1
52	F-EO-3954	ROD - Grass Inner Shoe	1	1
53	44-011-175	BOLT - Carriage - Shoe to Housing	1	1
	44-204	WASHER - Flat	1	1
	44-14	WASHER - Lock	1	1
	44-003	NUT - Hex	1	1
54	F-EO-3920	SHOE ASSEMBLY - Inner	1	1
55	44-011-450	BOLT - Carriage - Shoe to Spacer to Housing	1	1
	44-14	WASHER - Lock	1	1
	44-003	NUT - Hex	1	1
56	F-EO-3913	SPACER - Inner Shoe	1	1
57	F-EO-1560	SPACER ASSEMBLY - Cutter Bar	1	1
58	F-EO-1227	BOLT - Hex Head - Housing to Spacer to Cutter Bar	3	3

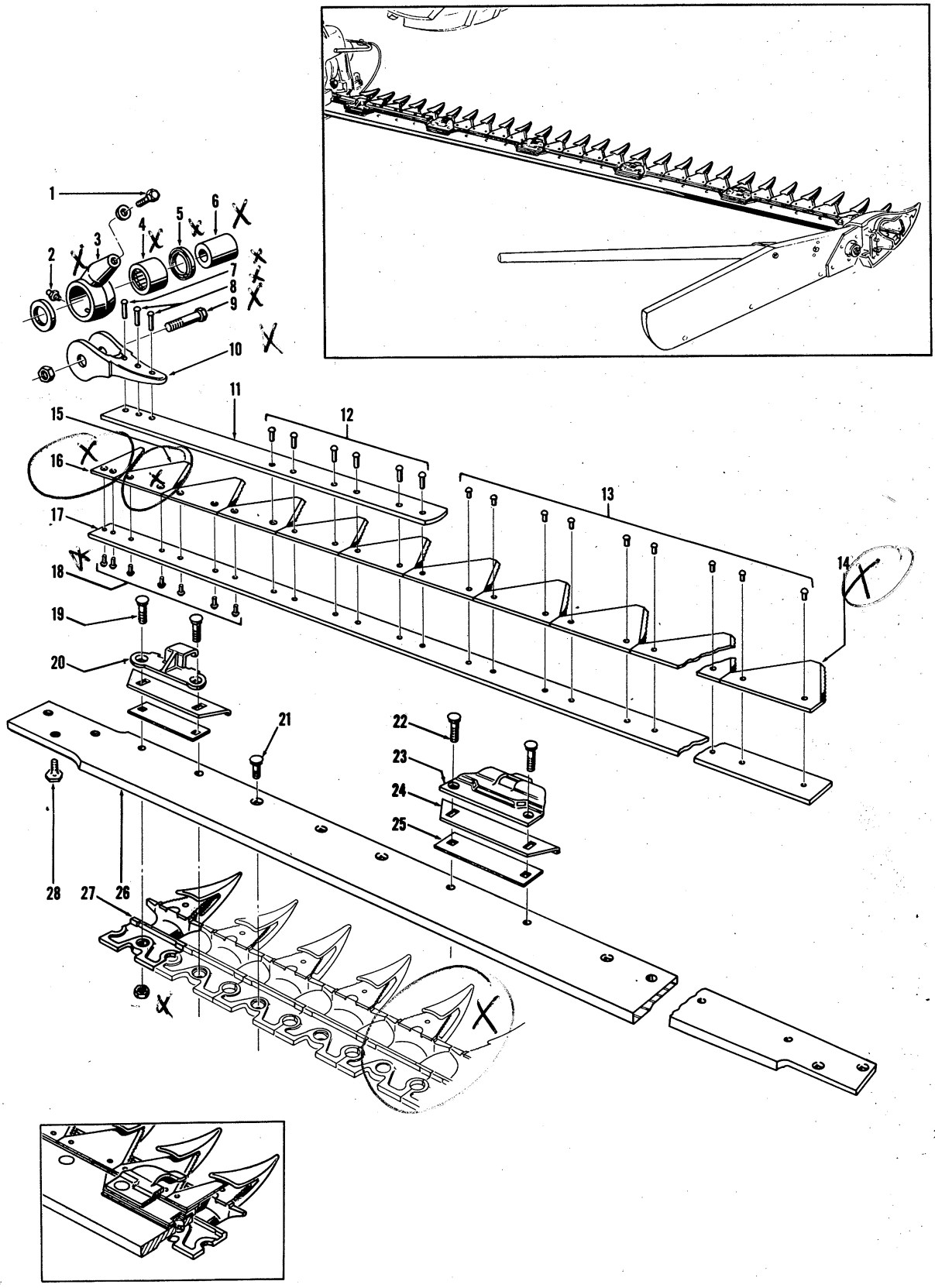

FIG. 7

F-EO-20 and 30 AGRICULTURAL MOWER PARTS LIST

REF. NO.	PART NO.	FIG. 7 CUTTER BAR AND KNIFE ASSEMBLIES	QUAN. REQ'D. 6 FT.	7 FT.
1	44-001-75	BOLT - Hex Head - Knife Head to Lever Assy.	1	1
	44-204	WASHER - Flat	1	1
	6F-EO-1251	KNIFE ASSEMBLY - w/Underserrated Sections	1	
	6F-EO-1250	KNIFE ASSEMBLY - w/Plain Sections	1	
	7F-EO-1251	KNIFE ASSEMBLY - w/Underserrated Sections		1
	7F-EO-1250	KNIFE ASSEMBLY - w/Plain Sections		1
		Composed of Items 2 thru 18		
	F-EO-1460	CONNECTOR AND KNIFE HEAD ASSEMBLY	1	1
		Composed of Items 2 thru 11		
2	25-007	FITTING - Lubrication - Connector	1	1
3	F-EO-1505	CONNECTOR - Knife Head	1	1
4	S-9887-A	BEARING - Needle	1	1
5	S-9916	SEAL - Oil	2	2
6	F-EO-1504	SPACER - Knife Head Bearing	1	1
	F-EO-1461	HEAD ASSEMBLY - Knife	1	1
		Composed of Items 7, 8, 10 and 11		
7	25-16-75	RIVET - C' Sunk Head - Connector to Spring	1	1
8	25-16-62	RIVET - C' Sunk Head - Connector to Spring	2	2
9	F-EO-1469	BOLT - Knife Head	1	1
	44-1003	NUT - Hex - Jam	1	1
10	F-EO-1463	HEAD - Knife	1	1
11	F-EO-1464	SPRING - Knife Head	1	1
12	22-06-75	RIVET - Button Head - Spring to Section to Back	6	6
13	22-06-56	RIVET - Button Head - Knife Section to Back	37	45
14	P-EO-1234	SECTION - Knife - Underserrated	21	25
	P-EO-1235	SECTION - Knife - Plain - Not Illustrated	21	25
15	F-EO-1224	SECTION - Special Knife - Underserrated	3	3
	F-EO-1225	SECTION - Special Knife - Plain - Not Illustrated	3	3
16	F-EO-1230	SECTION - Dummy Knife	1	1
17	6F-EO-1233	BACK - Knife	1	
	7F-EO-1233	BACK - Knife		1
18	22-16-56	RIVET - C' Sunk Head - Knife Section to Back	7	7
	6F-EO-1205	CUTTER BAR ASSEMBLY - w/outer Shoe	1	
	7F-EO-1205	CUTTER BAR ASSEMBLY - w/outer Shoe		1
		Composed of Items 19 thru 27 and Item 1 Fig. 8		
19	44-031-138	BOLT - Plow - Clip, Plate, Shim, Guard to Cutter Bar	2	2
	44-1003	NUT - Hex Jam	2	2
20	F-EO-1232	CLIP - Knife - High Arch	1	1
21	44-031-100	BOLT - Plow - Cutter Bar to Guard	11	15
	44-1003	NUT - Hex Jam - Not Illustrated	11	15
22	44-031-131	BOLT - Plow - Clip, Plate, Shim, Guard to Cutter Bar	10	10
	44-1003	NUT - Hex Jam - Not Illustrated	10	10
23	F-EO-1231	CLIP - Knife	5	5
24	F-EO-3943	PLATE - Knife Clip Wear	6	6
25	F-EO-9708	SHIM - Wear Plate	6	6
26	6F-EO-3941	BAR - Cutter	1	
	7F-EO-3941	BAR - Cutter		1
27	F-EO-1245	GUARD ASSEMBLY - Cutter Bar	22	26
	F-EO-1252	GUARD ASSEMBLY - Modified - R. H. End - Not Illustrated	1	1
		Composed of Guard which is not Serviced and		
	S-62292	RIVET - Flat Head - Ledger Plate to Guard	1	1
	P-EO-1236	PLATE - Ledger	1	1
28	F-EO-1227	BOLT - Hex Head Special - Housing to Spacer to Cutter Bar	3	3

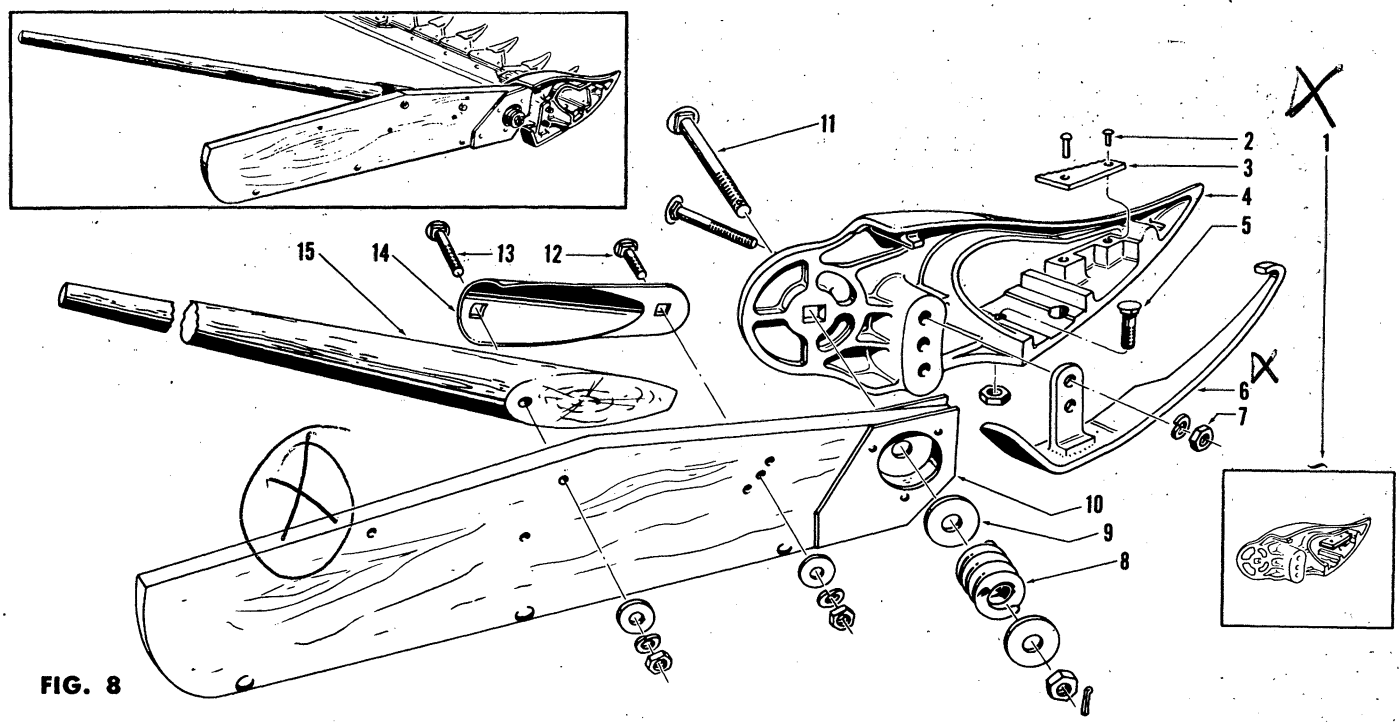

FIG. 8

REF. NO.	PART NO.	FIG 8 OUTER SHOE AND SWATHBOARD	QUAN. REQ'D. F-EO 20	QUAN. REQ'D. F-EO 30
1	F-EO-3950	SHOE ASSEMBLY - Outer Composed of items 2 thru 4	1	1
2	P-EO-3965	RIVET - Countersunk Head - Plate to Shoe - Short - Front	1	1
	P-EO-3966	RIVET - Countersunk Head Plate to Shoe - Long - Rear	1	1
3	P-EO-3946	PLATE - Outer Shoe	1	1
4	F-EO-3947	SHOE - Outer - Not Serviced - Order F-EO-3950		
5	44-031-100	BOLT - Plow - Cutter Bar to Shoe	2	2
	44-1003	NUT - Hex Jam	2	2
6	F-EO-3924	SOLE ASSEMBLY - Outer Shoe	1	1
7	44-011-212	BOLT - Carriage - Sole to Shoe	1	1
	44-14	WASHER - Lock	1	1
	44-003	NUT - Hex	1	1
	F-EO-9490	SWATHBOARD ASSEMBLY - Less Grass Stick Composed of Items 8 thru 13	1	1
8	P-EO-7022-A	SPRING - Swathboard	1	1
9	F-EO-9681	WASHER - Swathboard Spring	2	2
10	F-EO-9491	SWATHBOARD ASSEMBLY	1	1
11	F-EO-9630	BOLT - Swathboard Retainer	1	1
	44-013	NUT - Slotted Hex	1	1
	12-05-100	PIN - Cotter	1	1
12	31-011-125	BOLT - Carriage - Clamp to Swathboard	1	1
	31-104	WASHER - Flat	1	1
	31-14	WASHER - Lock	1	1
	31-003	NUT - Hex	1	1
13	31-011-250	BOLT - Carriage - Clamp to Grass Stick to Swathboard	1	1
	31-104	WASHER - Flat	1	1
	31-14	WASHER - Lock	1	1
	31-003	NUT - Hex	1	1
14	A-EO-B9497	CLAMP - Grass Stick	1	1
15	A-EO-B9498	STICK - Grass	1	1

A SYMBOL OF QUALITY

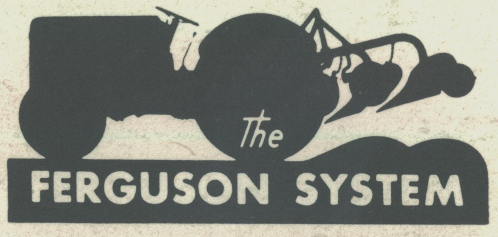

USE ONLY

GENUINE FERGUSON

SERVICE PARTS

Form 0-3507

LITHO IN U.S.A.