PARTS BOOK

FOR F-EO-35 SIDE MOUNTED MOWER

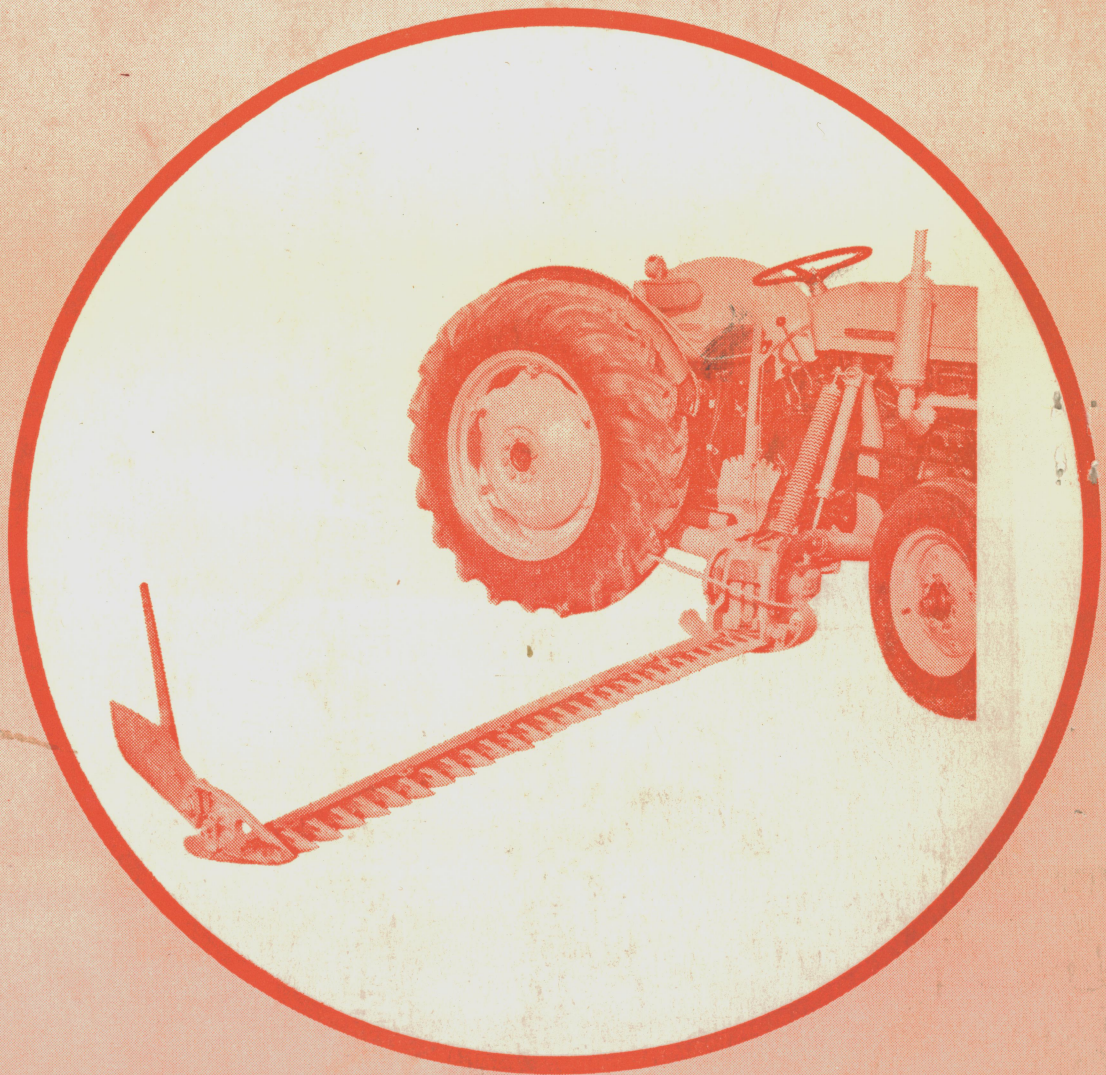

693 049 M2

MASSEY-HARRIS-FERGUSON
LIMITED

TORONTO CANADA

693 049 M2

THIS CANCELS ALL PREVIOUS LISTS

ILLUSTRATED REPAIR PARTS LIST

FOR

FERGUSON

F-EO-35 MOWER

SIDE MOUNTED

AGRICULTURAL - INDUSTRIAL

5 - 6 - 7-Ft. CUT

First Manufactured 1955

A MONEY-SAVING SUGGESTION FOR USERS OF REPAIR PARTS

IT PAYS, in most instances, when a part is required for your machine to also replace the parts that work with it. This proves most economical and assures utmost value and efficiency from the new part, as old parts speedily wear out the newly replaced part and generally prevent it from performing its functions properly.

MASSEY-HARRIS-FERGUSON Limited
TORONTO, CANADA

SECTIONAL INDEX

Page

Arm, Lift Cylinder and Spring 11

Cutter Bar and Knife Assemblies 16-18

Drag Bar, Drive Unit and Lift 7
Drive Unit Assembly 9

Exhaust Pipes 15

Frame, Tilt Lever, Break Back Compression Spring and P.T.O. Drive 5

Hardware 21
Hydraulic Valves 13
Hydraulic Valve 14

Lift Cylinder, Spring and Arm 11

Outer Shoe and Swathboard 20

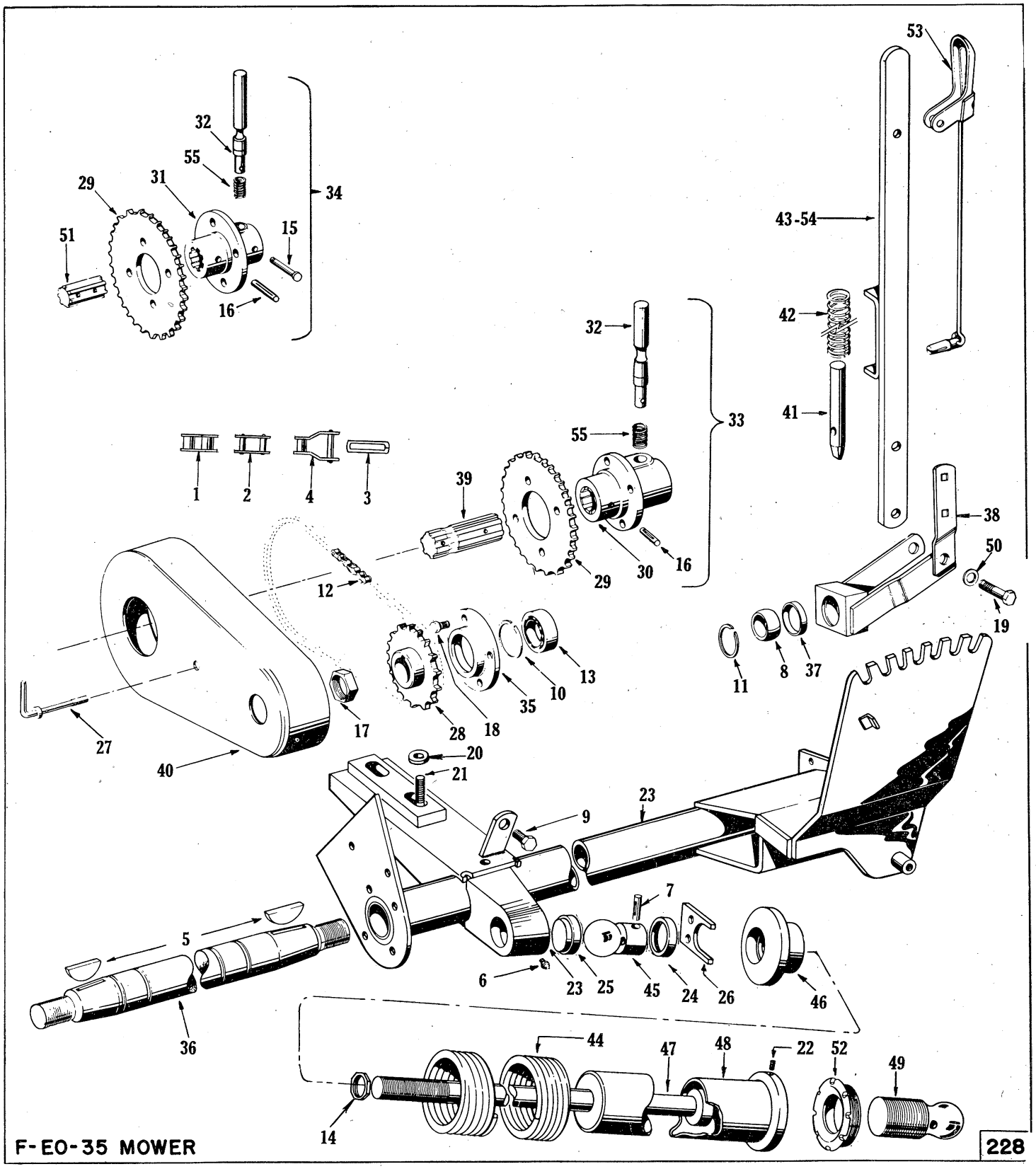

Do Not Order From Illustrations Only. Always Refer to Descriptive List.

BREAK BACK COMPRESSION SPRING, AND P.T.O. DRIVE FRAME, TILT LEVER

REF. No.	PART No.	DESCRIPTION	QUANTITY TO-35 Ind.	TO-35 Ang.	TO-30 Ag.	TEA Ag.
1	A 3359	Roller Link for 5/8" Single Chain	*	*	*	*
2	A 3360	Pin Link for 5/8" Single Chain	*	*	*	*
3	A 3362	Slot Washer for 5/8" Single Chain	*	*	*	*
4	A 3363	Offset Link for 5/8" Single Chain	*	*	*	*
5	12 501 X	Key, Sprocket and Pulley to Shaft, 1/4 x 1" Woodruff	2	2	2	2
6	13 811 X	Oil Fitting, 1/4"—28 Straight	1	1	1	1
7	16 722 X	Pin, Groove, 3/16 x 1 1/2"—Type 1	1	1	1	1
8	180 007 M1	Ball, for Link Assembly	1	1	1	1
9	195 599 M1	Bolt, Hex. Head, Special	1	1	1	1
10	195 859 M1	Ring, Snap	2	2	2	2
11	195 860 M1	Ring, Snap, for Socket for Link Assembly	1	1	1	1
12	195 882 M91	Chain Assembly	1	1	1	1
13	195 884 M1	Bearing, Ball	1	1	1	1
14	195 888 M1	Nut, Hex. Jam, 1" thread	1	1	1	1
15	195 969 M1	Pin, Clevis, for P.T.O. Shaft, (without Quick Latch Groove)	—	—	1	1
16	353 189 X1	Pin, Groove, 1/4 x 2"—Type 5	1	1	1	1
17	353 429 X1	Nut, 5/8". N.F. Hex, Jam	1	1	1	1
18	353 518 X1	Bolt, Retainer to Frame, 5/16 x 7/8". N.F. Hex. Head	4	4	4	4
19	353 557 X1	Cap Screw, Link for Tilt Lever to Frame, 7/16 x 3/4". N.F. Hex. Head	1	1	1	1
20	353 774 X1	Washer, 5/8" I.D., 1-5/16" O.D. x 1/8"	2	2	2	2
21	354 282 X1	Bolt, Frame to Tractor Centre Housing, 5/8 x 1 5/8". N.C. Hex. Head	2	2	2	2
22	354 459 X1	Screw, Set, 1/4 x 1" Hex. Socket	1	1	1	1
23	667 106 M91	Frame Assembly, Tube	1	1	1	1
24	667 107 M1	Socket, Front for Ball, 2-1/16" I.D. x 7/16"	1	1	1	1
25	667 108 M1	Socket, Rear, for Ball	1	1	1	1
26	667 109 M1	Plate, Retainer, Strut Ball, 2 3/4 x 5/16 x 2 1/2"	1	1	1	1
27	667 110 M91	Bolt, Assembly, Chain Guard, 5/16 x 3-3/16 under head to end, 5/16". Fine Thread	1	1	1	1
28	667 112 M91	Sprocket Assembly, 18 Teeth Driven	1	1	1	1
29	667 114 M1	Sprocket, 30 Teeth	1	1	1	1
30	667 115 M1	Hub for Sprocket, 1 3/8" Spline	1	1	—	—
31	667 116 M1	Hub for Sprocket, 1 1/8" Spline	—	—	1	1
32	667 117 M1	Pin (Quick Latch) 9/16" dia. x 4"	1	1	1	1
33	667 118 M91	Hub Assembly for Sprocket	1	1	—	—
34	667 119 M91	Hub Assembly for Sprocket	—	—	1	1
35	667 120 M1	Retainer for Bearing, 4" dia. x 3/4"	1	1	1	1
36	667 121 M1	Shaft, Drive, 1" dia. x 49 7/8" Long, 5/8" Thread	1	1	1	1
37	667 123 M1	Socket for Ball, for Link Assembly, 1 7/8" O.D. x 3/8"	2	2	2	2
38	667 128 M91	Link Assembly for Tilt Lever	1	1	1	1
39	667 201 M1	Extension for P.T.O. Shaft, 4" Long, 1 3/8" Spline	1	1	—	—
40	667 238 M91	Guard Assembly for Chain	1	1	1	1
41	667 252 M1	Plunger, 3/4 x 5 1/4"	1	1	1	1
42	667 253 M1	Spring, 1 1/8" O.D. x 4 3/4", 16 coils	1	1	1	1
43	667 259 M91	Lever, with welded parts, 24 1/4 long, 1955 only (See 668 574 M91)	1	1	1	1
	667 260 M91	Lever Assembly, 1955 only (See 668 575 M91)	1	1	1	1
44	667 261 M1	Spring, Compression Strut, 50 coils, 3 3/4 x 43-9/16""	1	1	1	1
45	667 262 M1	Ball, Rear, Compression Strut, 3 1/4" long	1	1	1	1
46	667 263 M1	Collar for Spring	1	1	1	1
47	667 266 M91	Shaft Assembly, Compression Strut, 1" dia. thread	1	1	1	1
48	667 270 M91	Tube Assembly, Compression Strut	1	1	1	1
49	667 271 M1	Ball, Compression Strut, Front, 1-11/16" Thread, 4 3/4" Long	1	1	1	1
50	667 556 M1	Washer, 1/2" I.D., 1 5/8" O.D. x 1/8"	1	1	1	1
51	667 679 M1	Extension, P.T.O. Shaft, 2-9/16" long, 1 1/8" Spline	—	—	1	1
52	667 859 M1	Retainer for Ball Joint	1	1	1	1
53	668 305 M91	Grip Rod and Pin Assembly	1	1	1	1
54	668 574 M91	Lever, with welded parts; First used 1956 (See 667 259 M91)	1	1	1	1
	668 575 M91	Lever Assembly, First used 1956 (See 667 260 M91)	1	1	1	1
55	1 000 644 M1	Spring	1	1	1	1

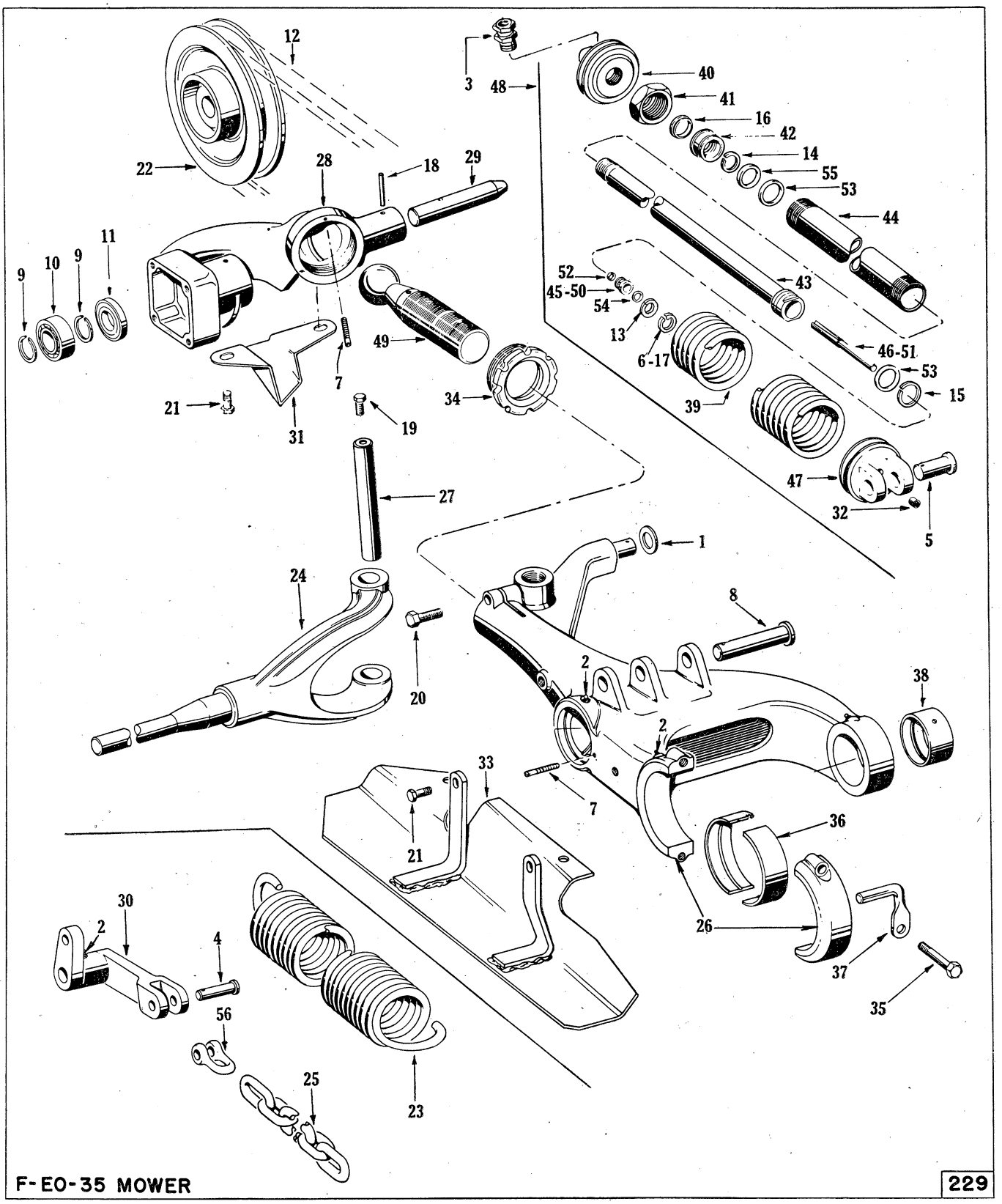
12
3
48
40
41
16
42
14
55
53
44
22
28
18
29
11
9
10
9
9
52
45-50
54
43
13
6-17
46-51
53
15
49
7
34
39
21
31
19
47
32
5
27
1
24
8
20
2
38
2
33
7
36
21
30
2
4
26
37
35
56
25
23
F-EO-35 MOWER
229

DRAG BAR, DRIVE UNIT, LIFT

REF. No.	PART No.	DESCRIPTION	QUANTITY TO 35 Ind.	TO 30 Ag.	TEA Ag.	
1	1 689 X	Washer, 13/16" I.D., 2" O.D. x 5/32"	—	1	1	1
2	13 811 X	Oil Fitting, ¼"—28 Straight	3	4	4	4
	130 414 M91	Kit for Meter Rod 1—196 108 M1, 1—668 357 M1, 1—668 378 M1; Will repair 668 290 M1, 668 291 M1	*	*	*	*
3	195 385 M1	Adapter Union	1	—	—	—
4	195 412 M1	Pin for Clevis, Shackle to Drag Bar	—	1	1	1
5	195 483 M1	Pin for Clevis Cylinder to Arm	1	—	—	—
6	195 575 M1	Snap Ring for Meter Rod. 1955 only (See 196 108 M1)	1	—	—	—
7	195 667 M1	Screw Slotted	2	2	2	2
8	195 753 M1	Pin, for Clevis	1	1	1	1
9	195 859 M1	Snap Ring for Bearing	2	2	2	2
10	195 885 M1	Bearing, Ball on Drive Shaft	1	1	1	1
11	195 897 M1	Oil Seal on Drive Shaft	1	1	1	1
12	195 899 M1	Belt Drive	1	1	1	1
13	195 918 M1	Washer, Back-up for Meter Rod	1	—	—	—
14	195 919 M1	Washer, Back-up for Cylinder	1	—	—	—
15	195 920 M1	Washer, Back-up in Piston Rod	1	—	—	—
16	195 921 M1	Scraper Ring in Cylinder	1	—	—	—
17	196 108 M1	Snap Ring for Metering Rod, first used 1956 (see 195 575 M1)	1	—	—	—
18	353 486 X1	Pin (Groove) Stud to Pulley Housing, ½ x 1"—Type 3	1	1	1	1
19	353 557 X1	Bolt in Pin for Tilt Yoke, 7/16 x ¾" Hex. Hd.	1	1	1	1
20	353 562 X1	Bolt for Ball Joint to Drag Bar, 7/16 x 1⅜" Hex. Hd.	1	1	1	1
21	353 695 X1	Cap Screw, Guard to Drag Bar, also Guard to Pulley Housing, 7/16 x ⅝"	5	5	5	5
22	667 122 M1	Pulley Drive, 7-9/16" dia.	1	1	1	1
23	667 132 M1	Spring for Drag Bar Housing, 18-13/16" between hooks	—	1	1	1
24	667 136 M91	Yoke, Assembly for Tilt Bar	1	1	1	1
25	667 154 M1	Chain for Lift, 8 Links	—	1	1	1
26	667 156 M91	Drag Bar Assembly, includes Cap	1	1	1	1
27	667 157 M1	Pin for Tilt Yoke, 1" dia. x 6⅛"	1	1	1	1
28	667 163 M92	Housing Assembly for Drive Pulley	1	1	1	1
29	667 164 M1	Stud in Pulley Housing, ⅞" dia. x 4⅞"	—	1	1	1
30	667 168 M91	Lever Assembly, Cylinder Lift	—	1	1	1
31	667 170 M1	Guard for Drive Pulley	1	1	1	1
32	667 207 M1	Air Filter in Cylinder Cap	1	—	—	—
33	667 223 M91	Guard Assembly for Belt	1	1	1	1
34	667 859 M1	Retainer for Ball Joint	1	1	1	1
35	667 871 M1	Bolt for Cap to Housing, 7/16 x 2½". Hex. Hd.	2	2	2	2
36	667 873 M1	Bearing rear	2	2	2	2
37	667 915 M1	Guide for Drive Belt	1	1	1	1
38	667 998 M1	Bearing, front	1	1	1	1
39	668 282 M1	Spring for Cylinder, 3½" O.D., 2¾" I.D., x 14-13/16"; 39½ Coils	1	—	—	—
40	668 283 M1	Cap for Cylinder, inner	1	—	—	—
41	668 284 M1	Retainer Nut for Cylinder	1	—	—	—
42	668 285 M1	Bushing for Piston Rod	1	—	—	—
43	668 288 M91	Piston and Rod Assembly	1	—	—	—
44	668 289 M1	Barrel for Cylinder	1	—	—	—
45	668 290 M1	Sleeve for Metering Rod, 1955 only; use 130 414 M91 (See 668 357 M1)	1	—	—	—
46	668 291 M1	Metering Rod, 1955 only; use 130 414 M91 (See 668 378 M1)	1	—	—	—
47	668 292 M1	Cap for Cylinder outer	1	—	—	—
48	668 293 M91	Cylinder and Spring Assembly	1	—	—	—
49	668 320 M1	Ball Joint for Pulley Housing	1	1	1	1
50	668 357 M1	Sleeve for Meter Rod, first used 1956 (see 668 290 M1)	1	—	—	—
51	668 378 M1	Metering Rod first used 1956 (see 668 291 M1)	1	—	—	—
52	851 138 M1	Packing Ring for Metering Rod; ⅜" I.D., ½" O.D. x 1/16"	1	—	—	—
53	851 145 M1	Packing Ring for Piston and Cylinder, 1" I.D., 1¼" O.D. x ⅛"	2	—	—	—
54	1 001 833 M1	Packing Ring Sleeve for Meter Rod, ¼" I.D., ⅜" O.D. x 1/16"	1	—	—	—
55	1 003 051 M1	Packing Ring for Cylinder, ⅞" I.D., 1⅛" O.D. x ⅛"	1	—	—	—
56	1 502 696 M1	Clevis for Chain, 7/16 in. dia., 1-11/16 in. under bend to centre of holes	—	1	1	1

In Ordering Repair Parts, Always State the Accessory or Unit — Also Machine Used On — It Helps.

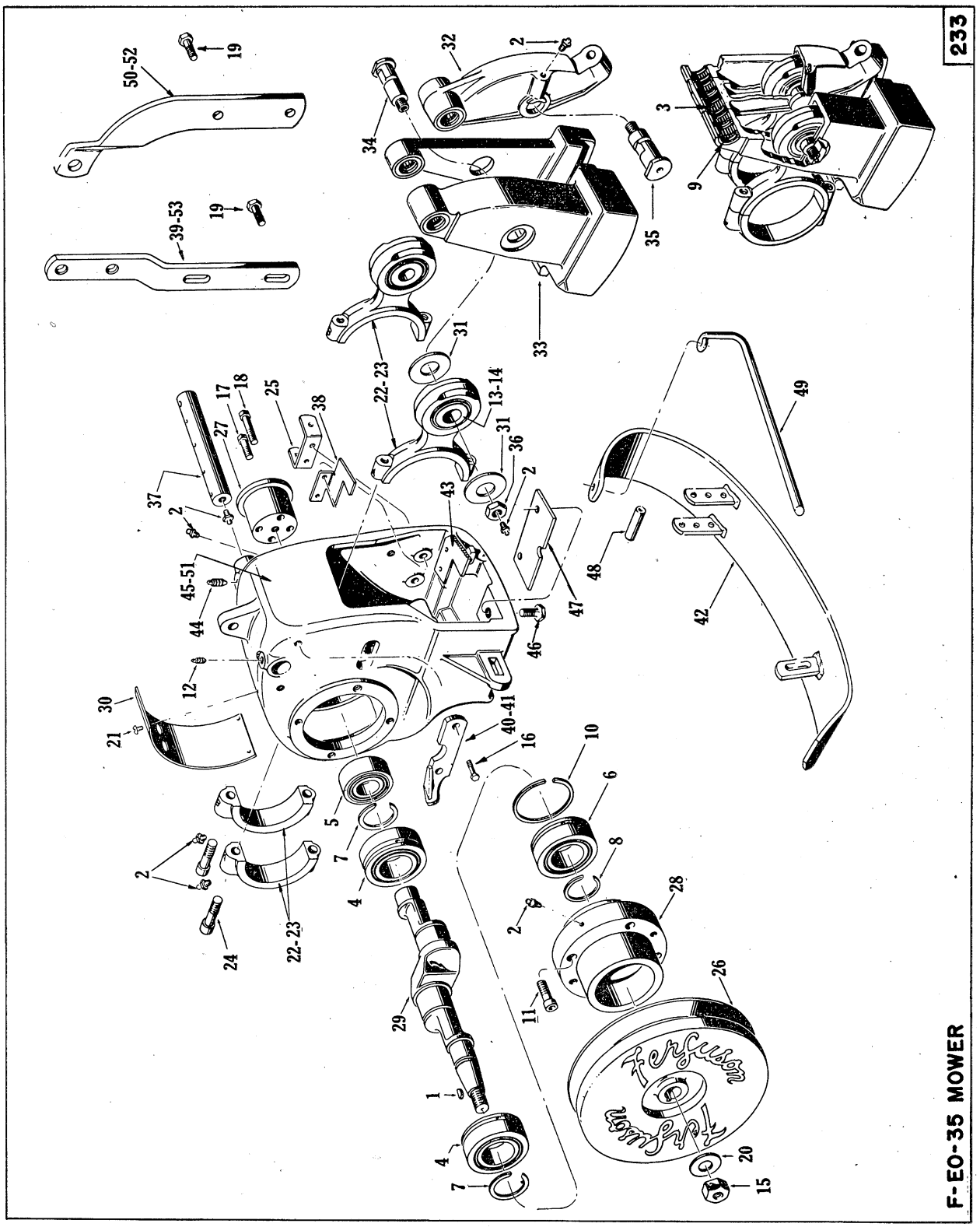

Do Not Order From Illustrations Only. Always Refer to Descriptive List.

REF. No.	PART No.	DESCRIPTION	QUANTITY

DRIVE UNIT ASSEMBLY

1	12 501 X	Key in Crankshaft, Woodruff No. 15	1
2	13 811 X	Oil Fitting, ¼-28 in. Straight, used various places	*
3	195 197 M1	Bearing (Needle) in Counterweight, also Lever	5
4	195 199 M91	Bearing and Seal Assembly for Connecting Rods	2
5	195 201 M91	Bearing and Seal Assembly for Crankshaft, front	1
6	195 203 M91	Bearing and Seal Assembly for Crankshaft, rear	1
7	195 222 M1	Snap Ring for Bearings for Connecting Rods	2
8	195 247 M1	Snap Ring for Rear Bearing for Crankshaft	1
9	195 321 M1	Oil Seal in Counterweight, also Lever	6
10	195 324 M1	Snap Ring for Rear Bearing for Crankshaft	1
11	195 326 M1	Screw, Housing for Rear Bearing to Drive Housing, ⅜ x 1 in. Socket Head	4
12	195 898 M1	Set Screw in Housing for Pivot Pin, ⅜ x 1-3/16 in. Sq. Hd.	1
13	195 979 M1	Seal for Bearing in Connecting Rod	4
14	195 980 M1	Bearing (Ball) in Connecting Rod	2
15	353 427 X1	Nut on Crankshaft, ⅝ in. Hex.	1
16	353 698 X1	Cap Screw, Stop for Lift Angle to Housing, 7/16 x 1 in.	2
	353 700 X1	Cap Screw, Arm to Housing, 7/16 x 1¼ in., 1955 only (see 353 726 X1)	2
17	353 704 X1	Cap Screw in Bearing, 7/16 in. x 1¾ in.	1
18	353 710 X1	Cap Screw, Bearing to Housing, 7/16 x 2½ in.	4
19	353 726 X1	Cap Screw, Arm to Housing, ⅝ x 1½ in., first used 1956 (see 353 700 X1)	2
20	353 774 X1	Washer on end of Crankshaft, ⅝ in.	1
21	353 987 X1	Screw, Cover to Housing, ¼ x ⅜ in.	4
22	667 020 M91	Connecting Rod and Cap Assembly, rear	1
23	667 021 M91	Connecting Rod and Cap Assembly, front	1
24	667 023 M1	Screw for Cap to Connecting Rod, ⅜ x 1⅞ in. Socket Hd.	4
25	667 027 M1	Bracket for Shoe to Housing	1
26	667 028 M1	Pulley on Crankshaft	1
27	667 029 M1	Bearing for Housing to Drag Bar	1
28	667 030 M1	Housing for rear Bearing for Crankshaft	1
29	667 031 M1	Crankshaft, ⅝ in. Thread	1
30	667 032 M1	Cover over Connecting Rods	1
31	667 033 M1	Shield for Bearings for Connecting Rod	4
32	667 034 M1	Lever Assembly for Knife Drive	1
33	667 036 M1	Counterweight Assembly	1
34	667 038 M1	Stud for Connecting Rod to Counterweight, ¾ in. dia. x 1⅞ in., ⅝ in. Thread	1
35	667 039 M1	Stud for Lever, lower, ¾ x 2-3/16 in., ⅝ in. Thread	1
36	667 040 M1	Nut for Studs for Lever, ⅝ in. Special	2
37	667 041 M1	Shaft (Pivot) for Lever	1
38	667 043 M1	Wearing Plate for Shoe	1
39	667 131 M1	Arm for Balance Spring and Cylinder, Not Ind. Tractor, 1955 only (see 668 277 M1, 668 581 M1)	1
40	667 141 M1	Stop for Lift Angle (can use 667 142 M91)	1
41	667 142 M91	Stop for Lift Angle, with Welded Parts (can use 667 141 M1)	1
42	667 146 M91	Shoe Assembly	1
43	667 173 M1	Ledger Plate	1
44	667 184 M1	Set Screw, Pivot Shaft to Housing, ⅜ dia. x 1⅝ in., Long Point	1
45	667 191 M91	Housing Assembly Drive Unit, 1955 only (see 668 360 M91)	1
	667 202 M91	Drive Unit Assembly, 1955 only (see 668 361 M91)	1
46	667 805 M1	Bolt for Spacer Plate for Cutter Bar to Housing, ⅝ x 1⅛ in.	3
47	667 878 M1	Spacer Plate, Cutter Bar to Housing	1
48	667 917 M1	Spacer for Inner Shoe	1
49	667 931 M1	Grass or Fender Rod to Shoe	1
50	668 277 M1	Arm for Balance Spring and Cylinder, Industrial only, 1955 only (see 667 131 M1, 668 362 M1)	1
51	668 360 M91	Housing Assembly Drive Unit, first used 1956 (see 667 191 M91)	1
	668 361 M91	Drive Unit Assembly, first used 1956 (see 667 202 M91)	1
52	668 362 M1	Arm for Balance Spring and Cylinder, Industrial only, first used 1956 (see 668 277 M1)	1
53	668 581 M1	Arm for Balance Spring and Cylinder, Not Ind. Tractor, first used 1956 (see 667 131 M1)	1

NOTE—The word "Welded" means the part so described is WELDED to some other part or parts, and should be ordered only as needed.

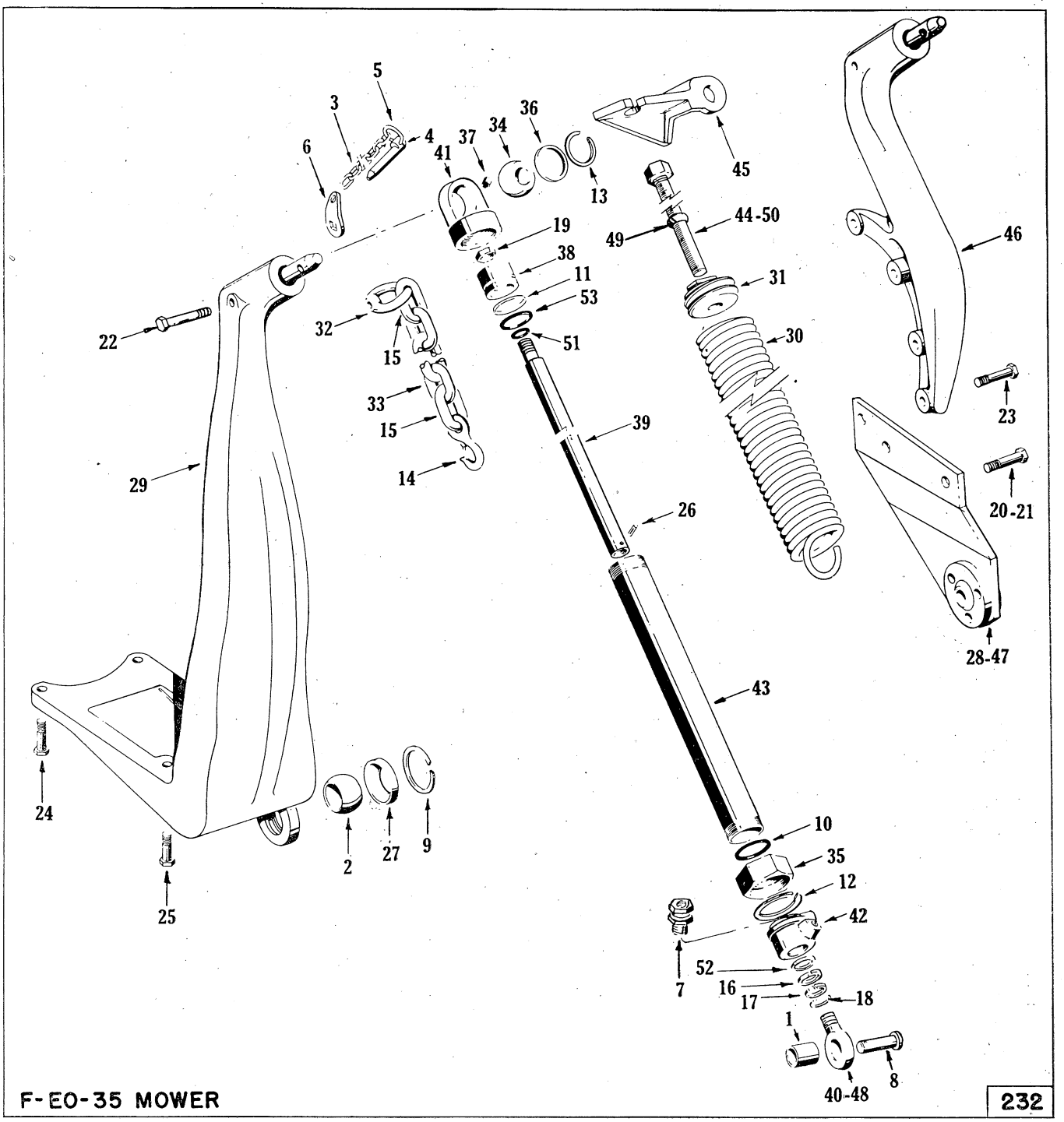

Do Not Order From Illustrations Only. Always Refer to Descriptive List.

LIFT CYLINDER, SPRING and ARM

REF. No.	PART No.	DESCRIPTION	QUANTITY TO-35 Ind.	TO-35 Ang.	TO-30 Ag.	TEA Ag.
1	DV 3608	Spacer on Pin for Cylinder End	1	—	—	—
2	180 007 M1	Ball in Support Arm	1	1	—	—
3	195 344 M1	Chain for Linch Pin	1	1	1	1
4	195 346 M1	Linch Pin	1	1	1	1
5	195 347 M1	Ring for Linch Pin	1	1	1	1
6	195 373 M1	Clip for Chain for Linch Pin	1	1	1	1
7	195 386 M1	Union Adapter	1	1	1	1
8	195 412 M1	Pin for Lower End of Cylinder	1	—	—	—
9	195 860 M1	Snap Ring for Ball Socket	1	1	—	—
10	195 876 M1	Packing Ring for Nut on Cylinder	1	1	1	1
11	195 878 M1	Back-up Washer for Piston Head	1	1	1	1
12	195 880 M1	Snap Ring, lower end of Cylinder	1	1	1	1
13	195 881 M1	Snap Ring for Ball at top end of Cylinder	1	1	1	1
	195 896 M91	Chain and Linch Pin Assembly	1	1	1	1
14	195 901 M1	Hook for Transport Chain	1	1	1	1
15	195 916 M1	Link (open) for Repairing Chain	2	2	2	2
16	195 919 M1	Back-up Washer in Lower Cap	1	1	1	1
17	195 921 M1	Wiper Ring in Lower Cap	1	1	1	1
18	195 965 M1	Snap Ring in Lower Cap	1	1	1	1
19	353 428 X1	Jam Nut on Piston Rod, 7/16 in. Hex.	1	1	1	1
20	353 698 X1	Cap Screw, Hitch to Tractor, 7/16 in. x 1 in.	—	—	3	—
21	353 699 X1	Cap Screw, Hitch to Tractor, 7/16 in. x 1⅛ in.	—	—	—	2
22	353 571 X1	Bolt for Lift Chain, 7/16 in. x 2½ in.	1	1	1	1
23	353 710 X1	Cap Screw, Arm to Tractor, 7/16 in. x 2½ in.	—	—	4	4
24	353 901 X1	Cap Screw, Arm to Tractor, ⅝ x 1¼ in.	2	2	—	—
25	354 289 X1	Cap Screw, Arm to Tractor, ⅝ x 3 in.	2	2	—	—
26	355 521 X1	Pin (Groove), lower end of Piston Rod, ⅛ x ⅞, Type 5	1	1	1	1
27	667 123 M1	Socket for Ball in Support Arm	1	1	—	—
28	667 130 M91	Hitch Assembly, front	—	—	1	—
29	667 137 M91	Support Arm for Lift	1	1	—	—
30	667 166 M1	Spring for Lift	1	1	1	1
31	667 167 M1	Plug in Upper end of Spring	1	1	1	1
32	667 169 M1	Eye for Lift Chain	1	1	1	1
33	667 186 M1	Chain for Transport	1	1	1	1
34	667 204 M1	Ball for Upper Cap for Cylinder	1	1	1	1
35	667 205 M1	Nut for lower end of Cylinder	1	1	1	1
36	667 206 M1	Socket for Ball, upper end of Cylinder	1	1	1	1
37	667 207 M1	Filter in Upper Cap	1	1	1	1
38	667 208 M1	Piston	1	1	1	1
39	667 209 M1	Rod for Piston	1	1	1	1
40	667 210 M1	Eye end for Cylinder, Short, 1-15/16 Centre of Eye to end	1	—	—	—
41	667 211 M1	Cap for upper end of Cylinder	1	1	1	1
42	667 212 M1	Cap for lower end of Cylinder	1	1	1	1
43	667 213 M1	Barrel for Cylinder	1	1	1	1
	667 214 M91	Cylinder Assembly	1	1	1	1
44	667 240 M91	Bolt for Lift Spring, 1955 only (see 668 313 M1)	1	1	1	1
45	667 242 M1	Bracket for Bolt for Lift Spring	1	1	1	1
	667 243 M91	Chain Assembly for Transport	1	1	1	1
46	667 244 M91	Support Arm for Lift	—	—	1	1
47	667 283 M91	Hitch Assembly, front	—	—	—	1
48	668 279 M1	Eye end for Cylinder, long, 4¼ in. Centre of Eye to end	—	1	1	1
49	668 312 M1	Oval Washer on Bolt for Lift Spring, 1⅛ in. dia. x ½ in., first used 1956	1	1	1	1
50	668 313 M1	Bolt for Lift Spring ½ x 6½ in., first used 1956 (see 667 240 M91)	1	1	1	1
51	1 002 987 M1	Packing Ring for end of Piston Rod	1	1	1	1
52	1 003 051 M1	Packing Ring for Cap at lower end of Cylinder	1	1	1	1
53	1 006 335 M1	Packing Ring for Piston	1	1	1	1

In Ordering Repair Parts, Always State the Accessory or Unit — Also Machine Used On — It Helps.

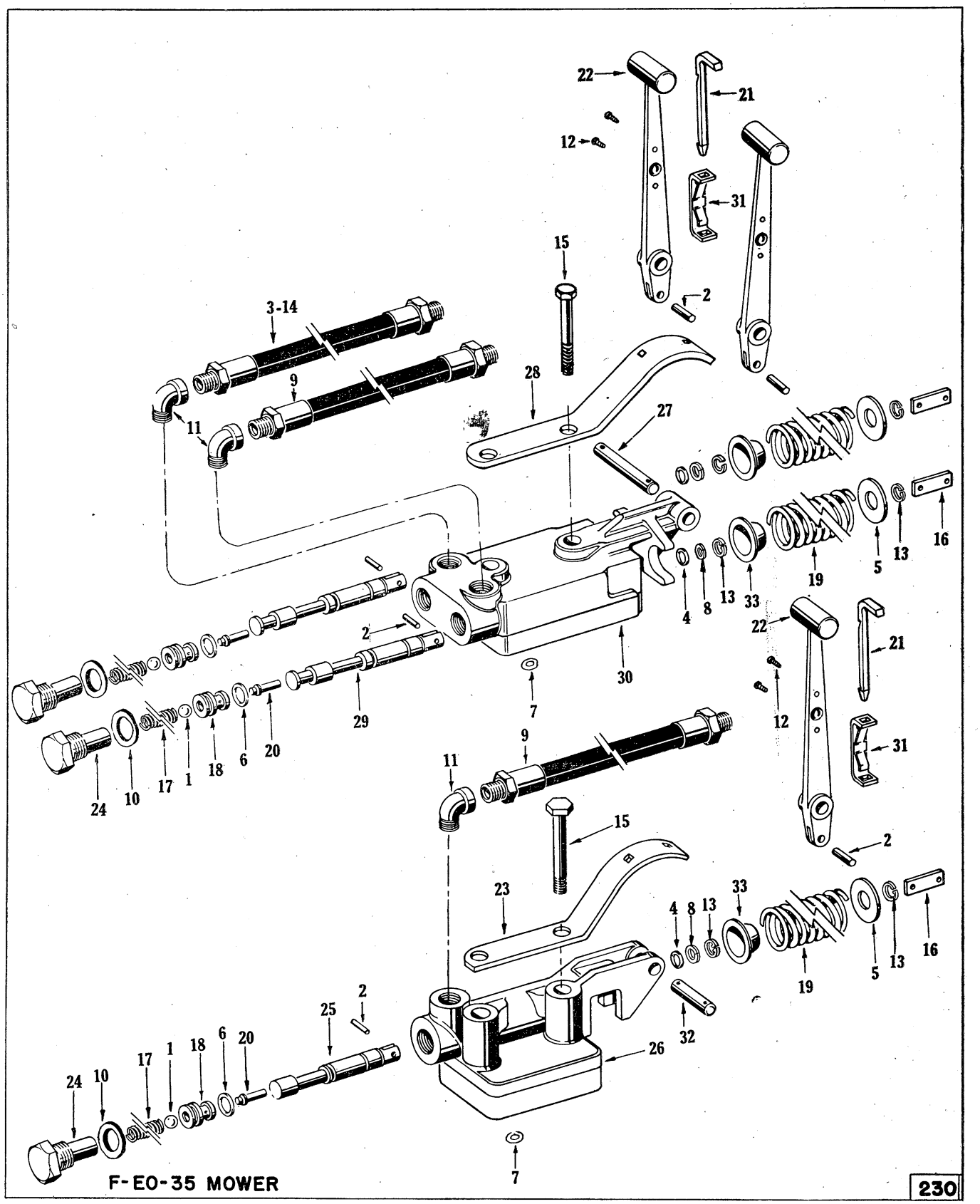

Do Not Order From Illustrations Only. Always Refer to Descriptive List.

HYDRAULIC VALVES

REF. No.	PART No.	DESCRIPTION	QUANTITY TO-35 Ind.	QUANTITY TO-35 Ag.
1	13 535 X	Ball Steel	2	1
2	22 677 X	Pin (Roll)	4	2
3	195 382 M1	Hose, 48¾", 1955 only (See 196 132 M91)	1	--
4	195 561 M1	Packing Ring on Spool	2	1
5	195 866 M1	Washer, front end of Spring	2	1
6	195 868 M1	Packing Ring for Variable Valve	2	1
7	195 869 M1	Packing Ring for Body	3	3
8	195 874 M1	Back-up Washer on Spool	2	1
9	195 883 M1	Hose, 42"	1	1
10	195 889 M1	Seal for Cap	2	1
11	195 929 M1	Elbow	2	1
12	195 935 M1	Screw, Self Tapping, Guide to Handle	2	2
13	195 986 M1	Snap Ring for Spool	4	2
14	196 132 M91	Hose, First used 1956 (See 195 382 M1)	1	—
15	353 712 X1	Cap Screw, Body to Tractor 7/16 x 3⅛"	2	2
16	667 150 M1	Connector Link	2	1
17	667 151 M1	Spring for Ball Check	2	1
18	667 158 M1	Body for Variable Valve	2	1
19	667 159 M1	Spring for Spool	2	1
20	667 161 M1	Variable Valve	2	1
21	667 172 M1	Plunger on Handle	2	1
22	667 175 M1	Handle	2	1
23	667 178 M1	Bracket for Plunger	—	1
24	667 181 M91	Cap Assembly and Retainer for Spring	2	1
25	667 182 M1	Spool, Single Control	—	1
26	667 189 M91	Body Assembly, Single Control	—	1
27	667 216 M1	Pin (Headless) for Handle	1	—
28	667 217 M1	Bracket for Plunger	1	—
29	667 218 M1	Spool, Dual Control	2	—
30	667 221 M91	Body Assembly, Dual Control	1	—
31	668 300 M91	Guide Assembly for Plunger	1	1
32	668 301 M1	Pin (Headless) for Handle	—	1
33	668 328 M1	Cup Washer for Spring	2	1
	677 049	Valve Assembly, Single Control	—	1
	677 050	Valve Assembly, Dual Control	1	—

NOTE—The word "Welded" means the part so described is WELDED to some other part or parts, and should be ordered only as needed.

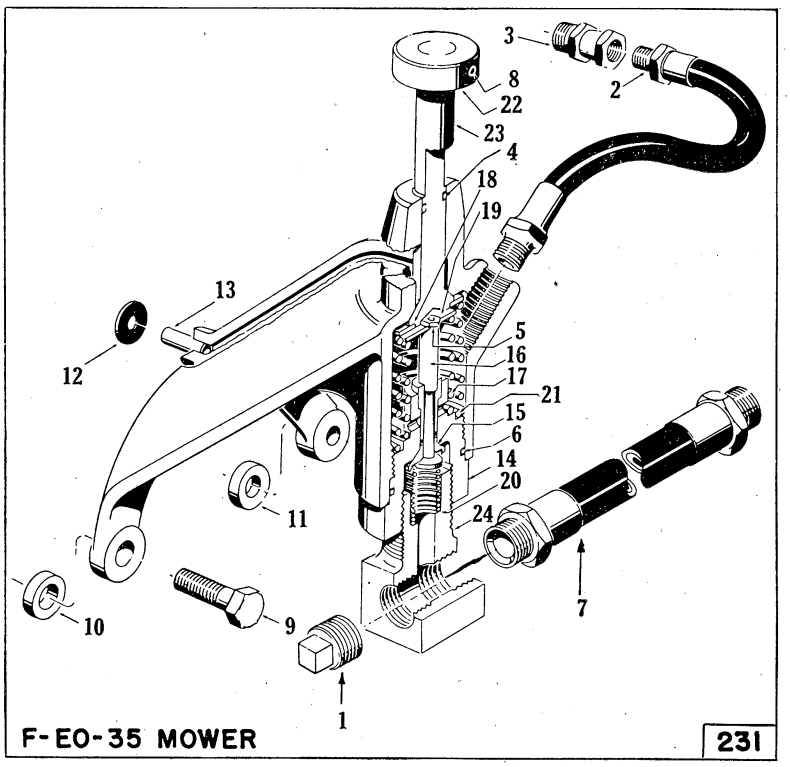

HYDRAULIC VALVE

REF. No.	PART No.	DESCRIPTION	QUANTITY TO-30 Ag.	QUANTITY TE-A Ag.
1	2411 X	Plug	2	2
	092 709	Hydraulic Fitting Kit	1	1
2	195 383 M1	Hose	1	1
3	195 385 M1	Union Adapter, ⅜ in.	1	1
	195 388 M1	Wrench Assembly	1	1
4	195 389 M1	Packing Ring for Primary Valve	1	1
5	195 469 M1	Nut for Variable Valve	1	1
6	195 470 M1	Packing Ring, Lower Valve Housing	1	1
7	195 883 M1	Hose, 42 in.	1	1
8	353 486 X1	Groove Pin, Cap to Primary Valve, 3/16 x 1, Type 3	1	1
9	353 702 X1	Cap Screw, Housing to Tractor, 7/16 x 1-½ in.	2	2
10	670 002 M1	Washer, ⅜ in. Thick	1	1
11	670 003 M1	Washer, ¼ in. Thick	1	1
12	670 004 M1	Gasket for Valve Tube	1	1
13	670 008 M1	Tube for Valve	1	1
	670 025 M91	Valve Assembly (Variable Orifice)	1	1
14	670 027 M1	Housing for Lower Valve	1	1
15	670 028 M1	Valve, Secondary	1	1
16	670 029 M1	Valve, Variable	1	1
17	670 030 M1	Spring for Variable Valve	1	1
18	670 032 M1	Washer for Primary Valve	1	1
19	670 033 M1	Washer for Variable Valve	1	1
20	670 034 M1	Spring for Secondary Valve	1	1
21	670 035 M1	Spring for Primary Valve	1	1
22	670 036 M1	Cap for Valve	1	1
23	670 037 M1	Valve Primary	1	1
24	670 583 M1	Retainer for Secondary Valve Spring	1	1

In Ordering Repair Parts, Always State the Accessory or Unit — Also Machine Used On — It Helps.

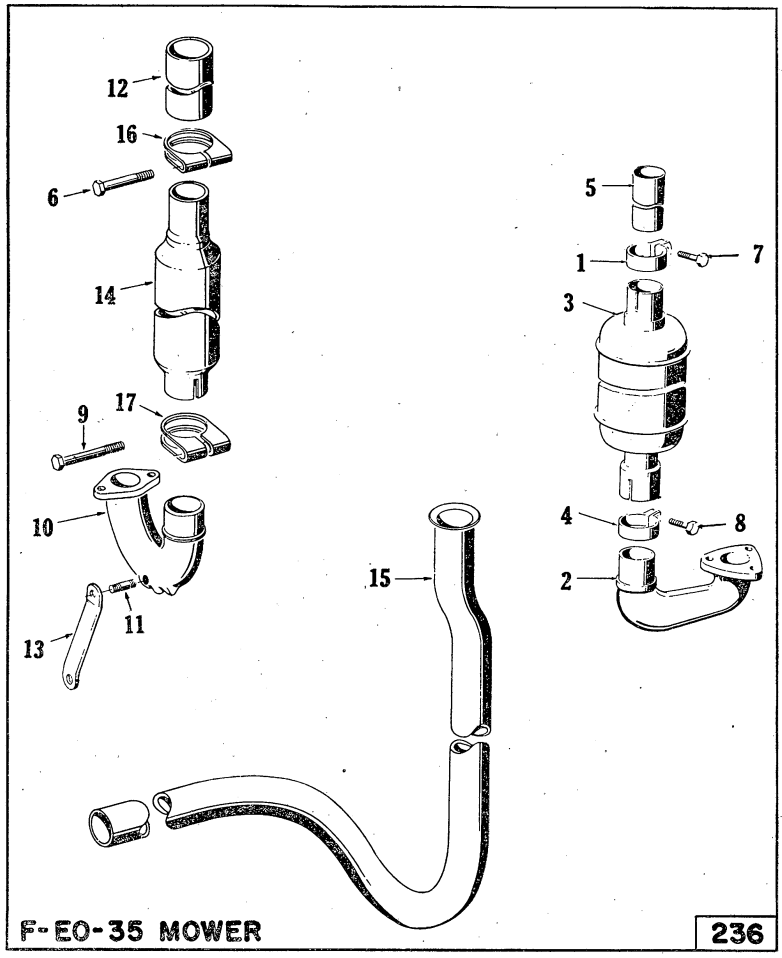

EXHAUST PIPES

REF. No.	PART No.	DESCRIPTION	QUANTITY TO 35 Ind.	TO 35 Ag.	TO 30 Ag.	TEA Ag.
1	180 070 M1	Clip for Outlet Pipe to Muffler	1	1	—	—
2	181 866 M1	Elbow	1	1	—	—
3	181 867 M91	Muffler	1	1	—	—
4	181 868 M1	Clip, Elbow to Muffler	1	1	—	—
5	181 869 M1	Pipe, Outlet	1	1	—	—
6	353 532 X1	Bolt in Clip, Outlet Pipe to Muffler, 5/16 x 2⅝ in., Hex. Head	—	—	—	1
7	353 669 X1	Cap Screw in Clip for Outlet Pipe	1	1	—	—
8	353 679 X1	Cap Screw, Clip for Elbow	1	1	—	—
9	353 898 X1	Cap Screw, Clip for Elbow to Muffler	—	—	—	1
10	640 010 M1	Elbow	—	—	—	1
11	640 011 M1	Stud for Strut to Elbow	—	—	—	1
12	640 012 M1	Outlet Pipe	—	—	—	1
13	640 013 M1	Strut, Elbow to Block	—	—	—	1
14	641 401 M1	Muffler	—	—	—	1
15	667 185 M1	Pipe, Manifold to Muffler	—	—	1	—
16	825 685 M1	Clip, Outlet Pipe to Muffler	—	—	—	1
17	825 686 M1	Clip, Elbow to Muffler	—	—	—	1

In Ordering Repair Parts, Always State the Accessory or Unit — Also Machine Used On — It Helps.

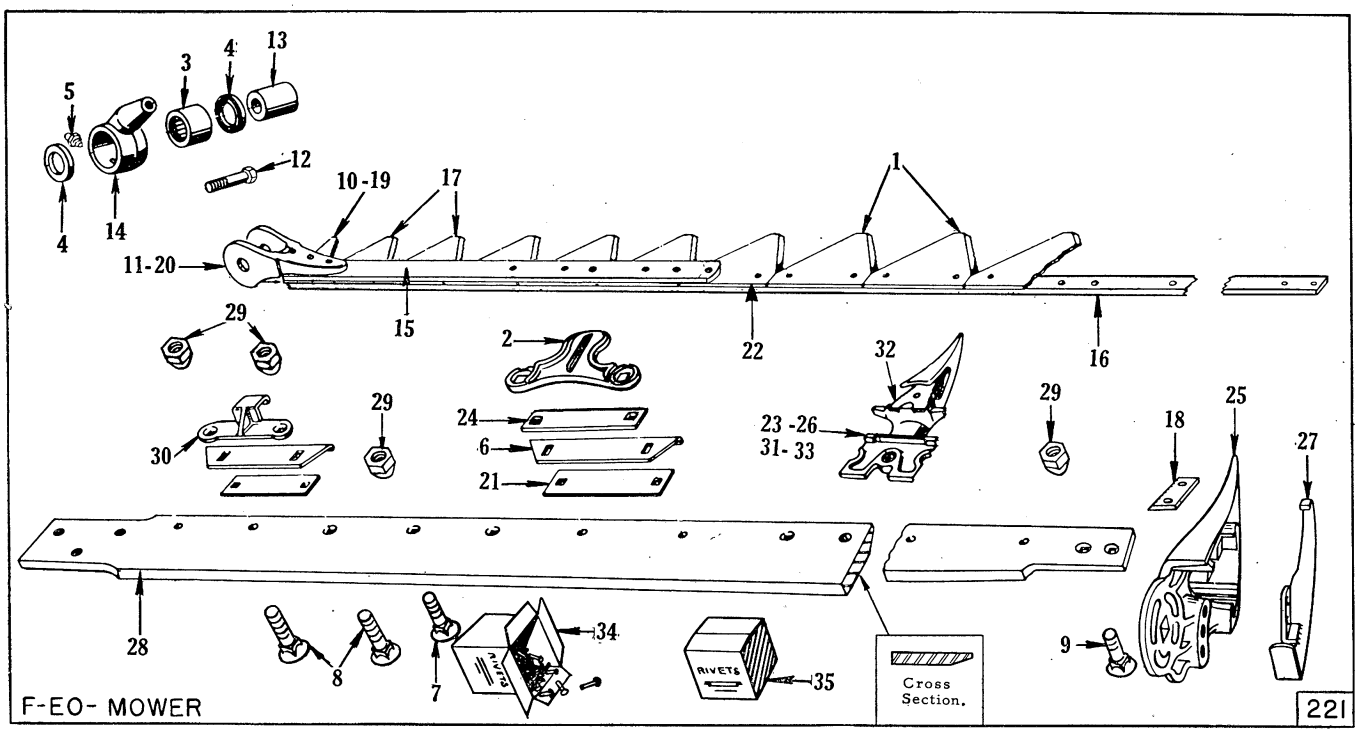

CUTTER BAR and KNIFE ASSEMBLIES—First used 1956

REF. No.	PART No.	DESCRIPTION	QUANTITY 5'	6'	7
1	L 1262	Section, Under-Serrated, Standard, 3 x 3¼ in.	—	21	25
1	M 2492	Section, Smooth, Standard, 3 x 3¼ in.	—	21	25
1	130 356 M1	Section, Under-Serrated, Heavy, 3 x 3¼ in.	17	21	25
1	130 357 M1	Section, Smooth, Heavy, 3 x 3¼ in.	17	21	25
2	130 431 M1	Clip for Knife, 3 x 4¼ in.	4	5	5
3	195 196 M1	Bearing for Connector (Needle)	1	1	1
4	195 321 M1	Oil Seal for Connector	2	2	2
5	200 191 M1	Oil Fitting in Connector, ¼-28 Straight	1	1	1
6	206 196 M1	Wearing Plate for Knife, 1⅝ x 6 in.	5	6	6
	353 835 X1	Bolt for Outside High Shoe, 7/16 x 2⅛ in. Carriage Head	1	1	1
7	354 377 X1	Bolt for Guard, 7/16 x 1-3/16 in. Plow	9	11	15
8	354 376 X1	Bolt for Guard and Cap, 7/16 x 1-9/16 in. Plow	10	12	12
9	354 397 X1	Bolt for Outside Shoe, 7/16 x ⅞ in. Plow	2	2	2
10	667 007 M1	Section, Dummy, Standard, 1⅜ x 3-3/16 in.	—	1	1
11	667 011 M1	Knife Head, Plain	1	1	1
12	667 013 M1	Bolt for Connector to Knife Head, 7/16 x 1-9/16 in. Hex. Head	1	1	1
13	667 014 M1	Spacer in Connector, ¾ in. dia. x 15/16 in.	1	1	1
14	667 015 M1	Connector, Plain	1	1	1
15	667 070 M1	Spring for Knife Head, 1 x 16¾ in.	1	1	1

REF. No.	PART No.	DESCRIPTION	QUANTITY 5'	6'	7
16	667 071 M1	Knife Back, ¾ x ¼ x 61-5/16 in.	1	—	—
16	667 072 M1	Knife Back, ¾ x ¼ x 73-5/16 in.	—	1	—
16	667 073 M1	Knife Back, ¾ x ¼ x 85-5/16 in.	—	—	1
17	667 077 M1	Section, Smooth, Standard, Countersunk, 3 x 3¼ in.	—	3	3
17	667 078 M1	Section, Smooth, Heavy, Countersunk, 3 x 3¼ in.	3	3	3
17	667 079 M1	Section, Under-Serrated, Standard, Countersunk, 3 x 3¼ in.	—	3	3
17	667 080 M1	Section, Under-Serrated, Heavy, Countersunk, 3 x 3¼ in.	3	3	3
18	667 083 M1	Ledger Plate for Shoe	1	1	1
19	667 187 M1	Section, Dummy, Heavy, 1⅜ x 3-3/16 in.	1	1	1
	667 195 M91	Connector and Knife Head Assembly, 1-195 196 M1, 2-195 321 M1, 1-200 191 M1, 1-667 013 M1, 1-667 014 M1, 1-667 015 M1, 1-667 200 M91	1	1	1
20	667 200 M91	Knife Head Assembly, 1-667 011 M1, 1-667 070 M1	1	1	1
21	667 978 M1	Shim for Wearing Plate, 1½ x 3-15/16 x .035	As required		
22	668 366 M91	Knife Assembly, Heavy, Smooth Section, 17-130 357 M1, 1-667 071 M1, 3-667 078 M1, 1-667 187 M1, 1-667 200 M91	1	—	—
22	668 368 M91	Knife Assembly, Under-Serrated, Heavy Sections, 17-130 356 M1, 1-667 071 M1, 3-667 080 M1, 1-667 187 M1, 1-667 200 M91	1	—	—
22	668 369 M91	Knife Assembly, Standard, Smooth Sections, 21-M 2492, 1-667 007 M1, 1-667 072 M1, 3-667 077 M1, 1-667 200 M91	—	1	—
22	668 370 M91	Knife Assembly, Heavy, Smooth Sections, 21-130 357 M1, 1-667 072 M1, 3-667 078 M1, 1-667 187 M1, 1-667 200 M91	—	1	—
22	668 371 M91	Knife Assembly, Standard, Under-Serrated Sections, 21-L 1262, 1-667 072 M1, 3-667 079 M1, 1-667 007 M1, 1-667 200 M91	—	1	—
22	668 372 M91	Knife Assembly, Heavy, Under-Serrated Sections, 21-130 356 M1, 1-667 072 M1, 3-667 080 M1, 1-667 187 M1, 1-667 200 M91	—	1	—
22	668 373 M91	Knife Assembly, Standard, Smooth Sections, 25-M 2492, 1-667 007 M1, 1-667 073 M1, 3-667 077 M1, 1-667 200 M91	—	—	1
22	668 374 M91	Knife Assembly, Heavy, Smooth Sections, 25-130 157 M1, 1-667 073 M1, 3-667 078 M1, 1-667 187 M1, 1-667 200 M91	—	—	1
22	668 375 M91	Knife Assembly, Standard, Under-Serrated Sections, 25-L 1262, 1-667 007 M1, 1-667 073 M1, 3-667 079 M1, 1-667 200 M91	—	—	1
22	668 376 M91	Knife Assembly, Heavy, Under-Serrated Sections, 25-130 356 M1, 1-667 073 M1, 3-667 080 M1, 1-667 187 M1, 1-667 200 M91	—	—	1
23	668 452 M91	Guard (Clipped Wing) Steel	—	23	27
23	668 454 M91	Guard (end) Steel	1	1	1
24	668 455 M1	Shim for Knife Clip, 1 x 3-15/16 in.	5	6	6
25	668 456 M91	Shoe, Outer	1	1	1
26	668 457 M91	Guard (end), Heavy Malleable, 7⅜ in.	1	1	1
27	668 583 M91	Sole or Slipper Shoe Assembly	1	1	1
28	668 584 M1	Bar, 3¾ x ⅝ x 66 in.	1	—	—
28	668 585 M1	Bar, 3¾ x ⅝ x 78 in.	—	1	—
28	668 586 M1	Bar, 3¾ x ⅝ x 84 in.	—	—	1
29	668 587 M1	Nut on Bolts for Guards, also Outside Shoe, 7/16-20 Hex.	21	25	29
30	668 591 M1	Clip for Knife, Inner	1	1	1
31	668 593 M91	Guard (Heavy), Malleable, 7⅜ in.	—	22	26
31	668 597 M91	Guard (Steel)	18	22	26
32	668 611 M1	Ledger Plate for Guard, Serrated, 1½ x 2½ in.	19	23	27
33	668 613 M91	Guard (Long), Malleable, 7-9/16 in.	—	22	26
33	668 614 M91	Guard (End Long), Malleable, 7-9/16 in.	—	1	1
33	668 623 M91	Guard, Clipped Wing (Long), Malleable, 7-9/16 in.	—	23	27
34	830 445 M1	Pound Package Rivets, Sections to Knife Back, 7/32 x 9/16 in. Rd. Head.	*	*	*
34	830 446 M1	Pound Package Rivets, Spring for Knife Head and Sections to Back, 7/32 x ¾ Rd. Head	*	*	*
34	830 580 M1	Pound Package Rivets, Sections to Knife Back, 7/32 x 9/16 in. Ctsk. Head	*	*	*
34	830 583 M1	Pound Package Rivets, Knife Head to Spring, ¼ x ⅝ in., Ctsk. Head	*	*	*
34	830 584 M1	Pound Package Rivets, Knife Head to Spring, ¼ x ¾ in., Ctsk. Head	*	*	*
35	830 621 M1	Pound Package Rivets, Ledger Plate to Heavy Guard, 7/32 x 1-7/16 in., Ctsk. Head.	*	*	*
35	830 709 M91	Pound Package Rivets, Ledger Plate to Guard, 7/32 x 1-5/16 in., Ctsk. Head	*	*	*
35	830 710 M91	Pound Package Rivets, Ledger Plate to Shoe, 7/32 x ⅝ in., Ctsk. Head	*	*	*

NOTE—The word "Welded" means the part so described is WELDED to some other part or parts, and should be ordered only as needed.

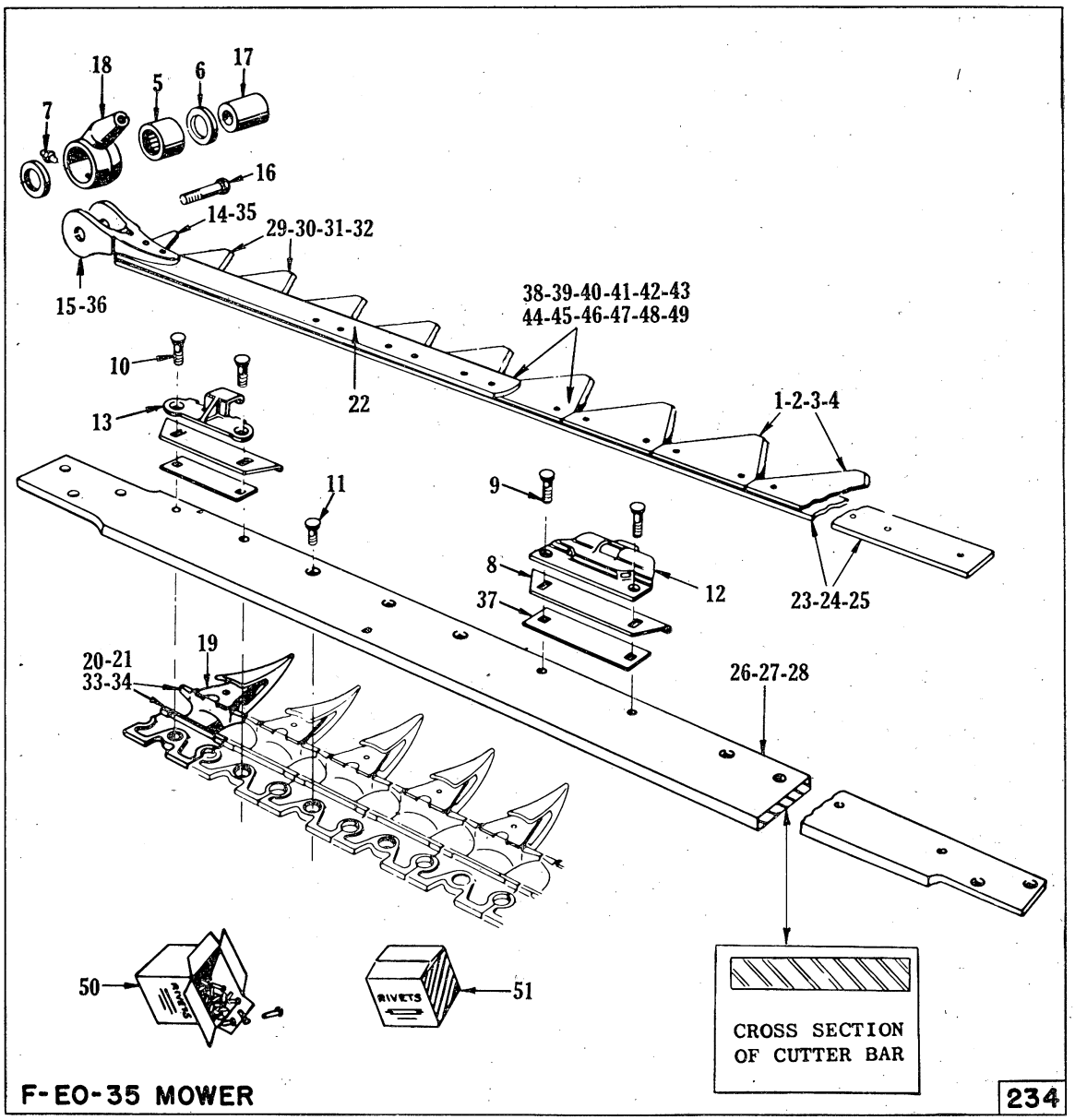

CUTTER BAR—1955 only

REF. No.	PART No.	DESCRIPTION	QUANTITY 5'	6'	7
1	L 1262	Section, Under-Serrated, Standard, 3 x 3¼ in.	17	21	25
2	M 2492	Section, Smooth, Standard, 3 x 3¼ in.	17	21	25
3	130 356 M1	Section, Under-Serrated, Heavy, 3 x 3¼ in.	17	21	25
4	130 357 M1	Section, Smooth, Heavy, 3 x 3¼ in.	17	21	25
5	195 196 M1	Bearing for Connector (Needle)	1	1	1
6	195 321 M1	Oil Seal for Connector	2	2	2
7	200 191 M1	Oil Fitting in Connector, ¼-28 Straight	1	1	1
8	206 196 M1	Wearing Plate for Knife, 1⅝ x 6 in.	5	6	6
9	353 416 X1	Bolt for Guard and Clip, 7/16 x 1½ Plow	8	10	10
10	354 376 X1	Bolt for Guard and Inner Clip, 7/16 x 1-9/16 in. Plow	2	2	2
11	354 377 X1	Bolt for Guard, 7/16 x 1-3/16 in. Plow	9	11	15
12	667 001 M1	Clip for Knife, regular	4	5	5

REF. No.	LIST No.	DESCRIPTION	QUANTITY 5'	6'	7
13	667 002 M1	Clip for Knife, inner	1	1	1
14	667 007 M1	Section, Dummy, Standard, 1⅜ x 3-3/16 in.	1	1	1
15	667 011 M1	Knife Head, Plain	1	1	1
16	667 013 M1	Bolt for Connector to Knife Head, 7/16 x 1-9/16 in. Hex. Hd.	1	1	1
17	667 014 M1	Spacer in Connector, ¾ in. dia. x 15/16 in.	1	1	1
18	667 015 M1	Connector, Plain	1	1	1
19	667 065 M1	Ledger Plate	19	23	27
20	667 066 M91	Guard, Heavy	18	22	26
21	667 067 M91	Guard, Standard	18	22	26
22	667 070 M1	Spring for Knife Head, 1 x 16¾ in.	1	1	1
23	667 071 M1	Knife, Back, ¾ x ¼ x 61-5/16 in.	1	—	—
24	667 072 M1	Knife, Back, ¾ x ¼ x 73-5/16 in.	—	1	—
25	667 073 M1	Knife, Back, ¾ x ¼ x 85-5/16 in.	—	—	1
26	667 074 M1	Bar, 3¾ x ⅝ x 66 in.	1	—	—
27	667 075 M1	Bar, 3¾ x ⅝ x 78 in.	—	1	—
28	667 076 M1	Bar, 3¾ x ⅝ x 90 in.	—	—	1
29	667 077 M1	Section, Smooth, Standard, Ctsk., 3 x 3¼ in.	3	3	3
30	667 078 M1	Section, Smooth, Heavy, Ctsk., 3 x 3¼ in.	3	3	3
31	667 079 M1	Section, Under-Serrated, Standard, Ctsk., 3 x 3¼ in.	3	3	3
32	667 080 M1	Section, Under-Serrated, Heavy, Ctsk., 3 x 3¼ in.	3	3	3
33	667 081 M91	Guard, end, Standard	1	1	1
34	667 082 M91	Guard, end, Heavy	1	1	1
35	667 187 M1	Section, Dummy, Heavy, 1⅜ x 3-3/16 in.	1	1	1
	667 195 M91	Connector and Knife Head of Assembly, 1-195 196 M1, 2-195 321 M1, 1-200 191 M1, 1-667 013 M1, 1-667 014 M1, 1-667 015 M1, 1-667 200 M91	1	1	1
36	667 200 M91	Knife Head Assembly, 1-667 011 M1, 1-667 070 M1	1	1	1
37	667 978 M1	Shim for Wearing Plate, 1½ x 3-15/16 x .035 in.	as required		
38	668 365 M91	Knife, Assembly, Standard, Smooth Sections, 17 M 2492, 1-667 007 M1, 1-667 071 M1, 3-667 077 M1, 1-667 200 M91	1	—	—
39	668 366 M91	Knife Assembly, Heavy, Smooth Section, 17-130 357 M1, 1-667 071 M1, 3-667 078 M1, 1-667 187 M1, 1-667 200 M91	1	—	—
40	668 367 M91	Knife Assembly, Under Serrated, Standard Sections, 17 L 1262, 1-667 007 M1, 1-667 071 M1, 3-667 077 M1, 1-667 200 M91	1	—	—
41	668 368 M91	Knife Assembly, Under Serrated, Heavy Sections, 17-130 356 M1, 1-667 071 M1, 3-667 080 M1, 1-667 187 M1, 1-667 200 M91	1	—	—
42	668 369 M91	Knife Assembly, Standard; Smooth Sections, 21 M 2492, 1-667 007 M1, 1-667 072 M1, 3-667 077 M1, 1-667 200 M91	—	1	—
43	668 370 M91	Knife Assembly, Heavy, Smooth Sections, 21-130 357 M1, 1-667 072 M1, 3-667 078 M1, 1-667 187 M1, 1-667 200 M91	—	1	—
44	668 371 M91	Knife Assembly, Standard, Under Serrated Sections, 21 L 1262, 1-667 072 M1, 3-667 079 M1, 1-667 007 M1, 1-667 200 M91	—	1	—
45	668 372 M91	Knife Assembly, Heavy, Under Serrated Sections, 21-130 356 M1, 1-667 072 M1, 3-667 080 M1, 1-667 187 M1, 1-667 200 M91	—	1	—
46	668 373 M91	Knife Assembly, Standard, Smooth Sections, 25 M 2492, 1-667 007 M1, 1-667 073 M1, 3-667 077 M1, 1-667 200 M91	—	—	1
47	668 374 M91	Knife Assembly, Heavy, Smooth Sections, 25-130 357 M1, 1-667 073 M1, 3-667 078 M1, 1-667 187 M1, 1-667 200 M91	—	—	1
48	668 375 M91	Knife Assembly, Standard, Under Serrated Sections, 25 L 1262, 1-667 007 M1, 1-667 073 M1, 3-667 079 M1, 1-667 200 M91	—	—	1
49	668 376 M91	Knife Assembly, Heavy, Under Serrated Sections, 25-130 356 M1, 1-667 073 M1, 3-667 080 M1, 1-667 187 M1, 1-667 200 M91	—	—	1
50	830 445 M1	Pound Package, Rivets, Sections to Knife Back, 7/32 x 9/16 in., Rd. Hd.	*	*	*
50	830 446 M1	Pound Package, Rivets, Spring for Knife Head and Sections to Back, 7/32 x ¾ in., Rd. Hd.	*	*	*
50	830 580 M1	Pound Package, Rivets, Sections to Knife Back, 7/32 x 9/16 in., Ctsk. Hd.	*	*	*
50	830 583 M1	Pound Package, Rivets, Knife Head to Spring, ¼ x ⅝ in., Ctsk. Hd.	*	*	*
50	830 584 M1	Pound Package, Rivets, Knife Head to Spring, ¼ x ¾ in., Ctsk. Hd.	*	*	*
50	830 621 M1	Pound Package Rivets, Ledger Plate to Heavy Guard, 7/32 x 1-7/16 in., Ctsk. Hd.	*	*	*
51	830 709 M91	Pound Package, Rivets, Ledger Plate to Guard, 7/32 x 1-5/16 in., Ctsk. Hd.	*	*	*

In Ordering Repair Parts, Always State the Accessory or Unit — Also Machine Used On — It Helps.

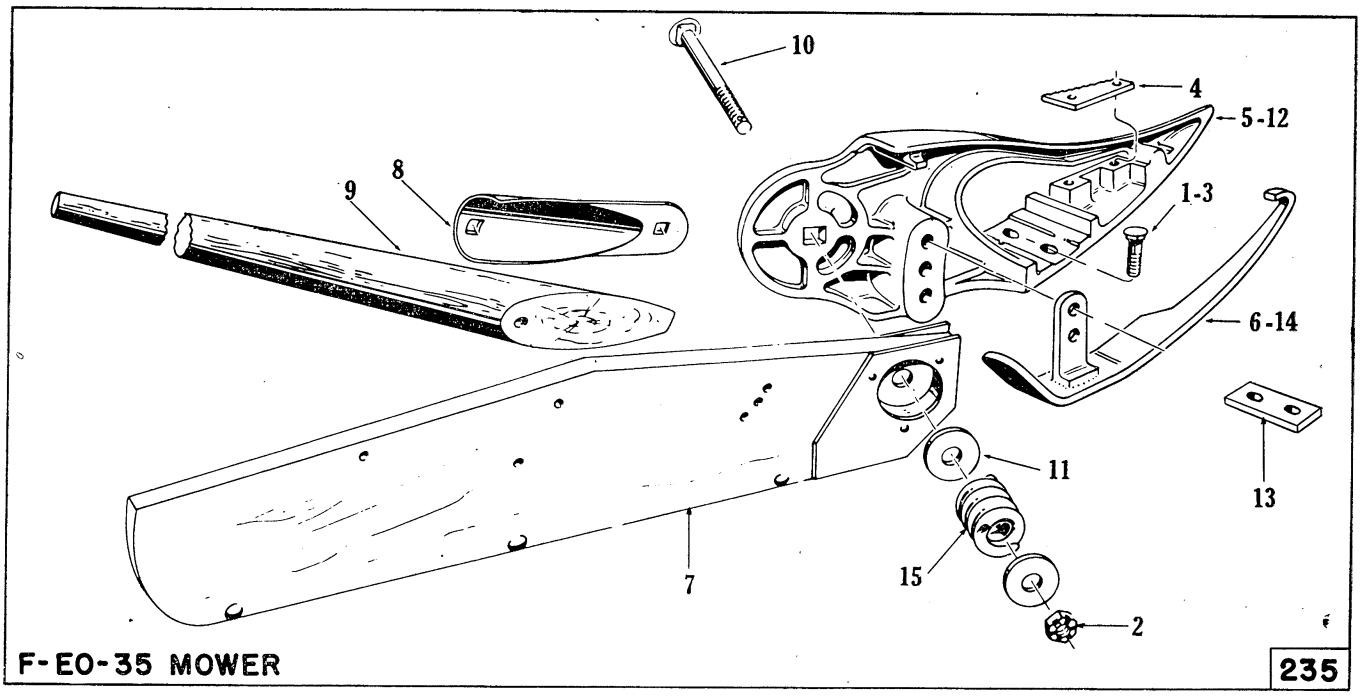

OUTER SHOE and SWATHBOARD

	LIST No.	DESCRIPTION	QUANTITY
1	353 413 X1	Bolt, Shoe to Cutter Bar, 7/16 x 1 in. Plow, 1955 only (see 354 377 X1)	2
2	353 925 X1	Nut (Slotted), on Bolt for Swathboard, 7/16 in.	1
3	354 377 X1	Bolt, Shoe to Cutter Bar, 7/16 x 1-3/16 in., Plow, first used 1956 (see 353 413 X1)	2
4	667 083 M1	Ledger Plate for Shoe	1
5	667 097 M91	Shoe Assembly, 1955 only (see 668 456 M91)	1
6	667 922 M91	Sole or Slipper Shoe Assembly, 1955 only (see 668 583 M91)	1
	667 964 M91	Swathboard Assembly (less Stick) includes 1-667 965 M91, 1-667 970 M1, 1-667 975 M1, 2-667 976 M1, 1-1 501 258 M1	1
7	667 965 M91	Swathboard Assembly	1
8	667 970 M1	Clamp for Grass Stick	1
9	667 971 M1	Grass Stick	1
10	667 975 M1	Bolt for Swathboard to Shoe, 7/16 x 2¾ in., Cge. Hd. drilled	1
11	667 976 M1	Washer for Spring, 7/16 in. I.D., 1⅝ in. O.D. x 3/16 in.	2
12	668 456 M91	Shoe Assembly, first used 1956 (see 667 097 M91)	1
13	668 458 M1	Spacer Plate, for Outer Shoe, 1¾ x ¼ x 2⅞ in., Repairs only, for using 667 097 M91, with new style Cutter Bar	1
14	668 583 M91	Sole or Slipper Shoe Assembly, First used 1956 (see 667 922 M91)	1
	830 710 M91	Rivets in Box	*
15	1 501 258 M1	Spring for Swathboard	1

NOTE—The word "Welded" means the part so described is WELDED to some other part or parts, and should be ordered only as needed.

HARDWARE

HEXAGON HEAD BOLTS

5/16" dia.

Length	Number
7/8"	353 518 X1

7/16" dia.

Length	Number
5/8"	353 695 X1
3/4"	353 557 X1
1 1/8"	353 560 X1
1 7/8"	353 666 X1
2 1/2"	353 571 X1

CARRIAGE HEAD BOLTS

5/16" dia.

Length	Number
1 1/4"	353 796 X1
2 1/2"	353 803 X1

7/16" dia.

Length	Number
1 1/4"	353 828 X1
1 3/8"	353 829 X1
1 1/2"	353 830 X1
1 3/4"	353 832 X1
2 1/8"	353 835 X1

HEXAGON NUTS

Dia.	Number
5/16"	353 916 X1
7/16"	353 426 X1
5/8"	353 427 X1

HEXAGON JAM NUTS

Dia.	Number
7/16"	353 428 X1
5/8"	353 429 X1

NUMERICAL INDEX

List No.	Page
L 1262	16, 18
1 689 X	7
2 411 X	14
M 2492	16, 18
A 3359	5
A 3360	5
A 3362	5
A 3363	5
DV 3608	11
12 501 X	5, 9
13 535 X	13
13 811 X	5, 7, 9
16 722 X	5
22 677 X	13
092 709	14
130 356 M1	16, 18
130 357 M1	16, 18
130 414 M91	7
130 431 M1	16
180 007 M1	5, 11
180 070 M1	15
181 866 M1	15
181 867 M91	15
181 868 M1	15
181 869 M1	15
195 196 M1	16, 18
195 197 M1	9
195 199 M91	9
195 201 M91	9
195 203 M91	9
195 222 M1	9
195 247 M1	9
195 321 M1	16, 18
195 324 M1	9
195 326 M1	9
195 344 M1	11
195 346 M1	11
195 347 M1	11
195 373 M1	11
195 382 M1	13
195 383 M1	14
195 385 M1	7, 14
195 386 M1	11
195 388 M1	14
195 389 M1	14
195 412 M1	7, 11
195 469 M1	14
195 470 M1	14
195 483 M1	7
195 561 M1	13
195 575 M1	7
195 599 M1	5
195 667 M1	7
195 753 M1	7
195 859 M1	5, 7
195 860 M1	5, 11
195 866 M1	13
195 868 M1	13
195 869 M1	13
195 874 M1	13
195 876 M1	11
195 878 M1	11
195 880 M1	11
195 881 M1	11
195 882 M91	5
195 883 M1	13, 14
195 884 M1	5
195 885 M1	7
195 888 M1	5
195 889 M1	13
195 896 M91	11
195 897 M1	7
195 898 M1	9
195 899 M1	7
195 901 M1	11
195 916 M1	11
195 918 M1	7
195 919 M1	7, 11
195 920 M1	7
195 921 M1	7, 11
195 929 M1	13
195 935 M1	13
195 965 M1	11
195 969 M1	5
195 979 M1	9
195 980 M1	9
195 986 M1	13
196 108 M1	7
196 132 M91	13
200 191 M1	16, 18
206 196 M1	18
353 189 X1	5
353 413 X1	20
353 416 X1	18
353 427 X1	9
353 428 X1	11
353 429 X1	5
353 486 X1	7, 14
353 518 X1	5
353 532 X1	15
353 557 X1	5, 7
353 562 X1	7
353 571 X1	11
353 669 X1	15
353 679 X1	15
353 695 X1	7
353 698 X1	9, 11
353 699 X1	11
353 700 X1	9
353 702 X1	14
353 704 X1	9
353 710 X1	9, 11
353 712 X1	13
353 726 X1	9
353 774 X1	5, 9
353 835 X1	16
353 898 X1	15
353 901 X1	11
353 925 X1	20
353 987 X1	9
354 282 X1	5
354 289 X1	9
354 376 X1	16, 18
354 377 X1	16, 18, 20
354 397 X1	16
354 459 X1	5
355 521 X1	11
640 010 M1	15
640 011 M1	15
640 012 M1	15
640 013 M1	15
641 401 M1	15
667 001 M1	18
667 002 M1	19
667 007 M1	16, 19
667 011 M1	16, 19
667 013 M1	16, 19
667 014 M1	16, 19
667 015 M1	16, 19
667 020 M91	9
667 021 M91	9
667 023 M1	9
667 027 M1	9
667 028 M1	9
667 029 M1	9
667 030 M1	9
667 031 M1	9
667 032 M1	9
667 033 M1	9
667 034 M1	9
667 036 M1	9
667 038 M1	9
667 039 M1	9
667 040 M1	9
667 041 M1	9
667 043 M1	9
667 065 M1	19
667 066 M91	19
667 067 M91	19
667 070 M1	16, 19
667 071 M1	17, 19
667 072 M1	17, 19
667 073 M1	17, 19
667 074 M1	19
667 075 M1	19
667 076 M1	19
667 077 M1	17, 19
667 078 M1	17, 19
667 079 M1	17, 19
667 080 M1	17, 19
667 081 M91	19
667 082 M91	19
667 083 M1	17, 20
667 097 M91	20
667 106 M91	5
667 107 M1	5
667 108 M1	5
667 109 M1	5
667 110 M91	5
667 112 M91	5
667 114 M1	5
667 115 M1	5
667 116 M1	5
667 117 M1	5
667 118 M91	5
667 119 M91	5
667 120 M1	5
667 121 M1	5
667 122 M1	7
667 123 M1	5, 11
667 128 M91	5
667 130 M91	11
667 131 M1	9
667 132 M1	7
667 136 M91	7
667 137 M91	11
667 141 M1	9
667 142 M91	9
667 146 M91	9
667 150 M1	13
667 151 M1	13
667 154 M1	7
667 156 M91	7
667 157 M1	7
667 158 M1	13
667 159 M1	13
667 161 M1	13
667 163 M92	7
667 164 M1	7
667 166 M1	11
667 167 M1	11
667 168 M91	7
667 169 M1	11
667 170 M1	7
667 172 M1	13
667 173 M1	9
667 175 M1	13
667 178 M1	13
667 181 M91	13
667 182 M1	13
667 184 M1	9
667 185 M1	15
667 186 M1	11
667 187 M1	17

Part No.	Page
667 189 M91	13
667 191 M91	9
667 195 M91	17
667 200 M91	17
667 201 M1	5
667 202 M91	9
667 204 M1	11
667 205 M1	11
667 206 M1	11
667 207 M1	7, 11
667 208 M1	11
667 209 M1	11
667 210 M1	11
667 211 M1	11
667 212 M1	11
667 213 M1	11
667 214 M91	11
667 216 M1	13
667 217 M1	13
667 218 M1	13
667 221 M91	13
667 223 M91	7
667 238 M91	5
667 240 M91	11
667 242 M1	11
667 243 M91	11
667 244 M91	11
667 252 M1	5
667 253 M1	5
667 259 M91	5
667 260 M91	5
667 261 M1	5
667 262 M1	5
667 263 M1	5
667 266 M91	5
667 270 M91	5
667 271 M1	5
667 283 M91	11
667 556 M91	5
667 679 M1	5
667 805 M1	9
667 859 M1	5, 7
667 871 M1	7
667 873 M1	7
667 878 M1	9
667 915 M1	7
667 917 M1	9
667 922 M91	20
667 931 M1	9
667 964 M91	20
667 965 M91	20
667 970 M1	20
667 971 M1	20
667 975 M1	20
667 976 M1	20
667 978 M1	17, 19
667 998 M1	7
668 277 M1	9
668 279 M1	11
668 282 M1	7
668 283 M1	7
668 284 M1	7
668 285 M1	7
668 288 M91	7
668 289 M1	7
668 290 M1	7
668 291 M1	7
668 292 M1	7
668 293 M91	7
668 300 M91	13
668 301 M1	13
668 305 M91	5
668 312 M1	11
668 313 M1	11
668 320 M1	7
668 328 M1	13
668 357 M1	7
668 360 M91	9
668 361 M1	9
668 362 M1	9
668 365 M91	19
668 366 M91	17, 19
668 367 M91	19
668 368 M91	17, 19
668 369 M91	17, 19
668 370 M91	17, 19
668 371 M91	17, 19
668 372 M91	17, 19
668 373 M91	17, 19
668 374 M91	17, 19
668 375 M91	17, 19
668 376 M91	17, 19
668 378 M1	7
668 452 M91	17
668 454 M91	17
668 455 M1	17
668 456 M91	17, 20
668 457 M91	17
668 458 M1	20
668 574 M91	5
668 575 M91	5
668 581 M1	9
668 583 M91	17, 20
668 584 M1	17
668 585 M1	17
668 586 M1	17
668 587 M1	17
668 591 M1	17
668 593 M91	17
668 597 M91	17
668 611 M1	17
668 613 M91	17
668 614 M91	17
668 623 M91	17
670 002 M1	14
670 003 M1	14
670 004 M1	14
670 008 M1	14
670 025 M91	14
670 027 M1	14
670 028 M1	14
670 029 M1	14
670 030 M1	14
670 032 M1	14
670 033 M1	14
670 034 M1	14
670 035 M1	14
670 036 M1	14
670 037 M1	14
670 583 M1	14
677 049	13
677 050	13
825 685 M1	15
825 686 M1	15
830 445 M1	17, 19
830 446 M1	17, 19
830 580 M1	17, 19
830 583 M1	17, 19
830 584 M1	17, 19
830 621 M1	17, 19
830 709 M91	17, 19
830 710 M91	17, 20
851 138 M1	7
851 145 M1	7
1 000 644 M1	5
1 001 833 M1	7
1 002 987 M1	11
1 003 051 M1	7, 13
1 006 335 M1	11
1 501 258 M1	20
1 502 696 M1	7

A SYMBOL OF QUALITY

USE ONLY

GENUINE FERGUSON

SERVICE PARTS

3451 45c 4-56

PRINTED IN CANADA